Flow monitoring
Immersion sensor with integrated processor
FCS-M18-LIX/D240

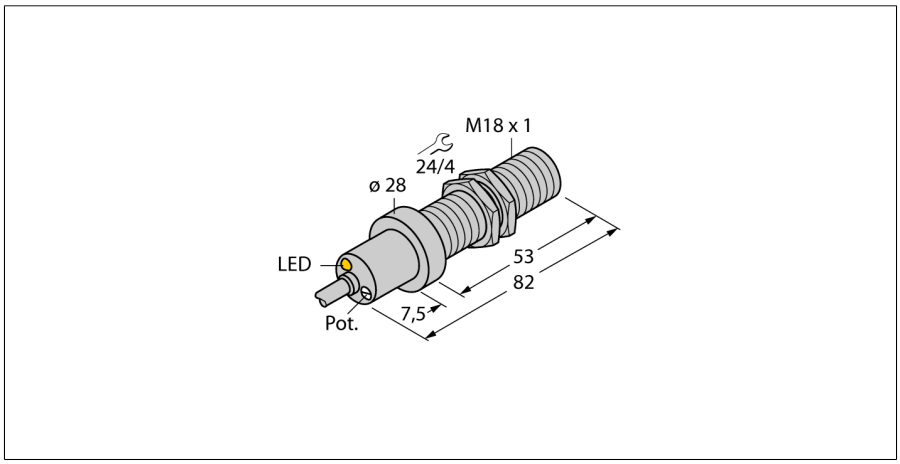

- **Sensor for gaseous media**
- **Calorimetric functionality**
- **Adjustments via potentiometer**
- **Operating range acc. to reference sensor**
- **LED "power on" indication**
- **Chrome-plated brass sensor**
- **Metal dead stop firmly bonded to the last threads**
- **Integral 30 cm cable with wire sleeves**
- **Coding of the conductors with numbers: 1) BN, 3) BU 4) BK**
- **DC 3-wire, 19.2…28.8 VDC**
- **4…20 mA analog output**

Type designation	FCS-M18-LIX/D240
Ident no.	6870719
Mounting conditions	Immersion sensor
Air Operating Range	0.5…20 m/s
Stand-by time	20…40 s
Setting time	typ. 2 s
Temperature gradient	≤ 200 K/min
Medium temperature	-20…+70 °C
Ambient temperature	-20…+70 °C
Operating voltage	19.2…28.8 VDC
Current consumption	≤ 70 mA
Output function	Analog output
Short-circuit protection	yes
Reverse polarity protection	yes
Current output	4…20 mA
Load	200…500 Ω
Protection class	IP67
Housing material	Metal, CuZn
Sensor material	Brass, brass, nickel-plated
Electrical connection	Nexans Flamex SH20 EN 50306-compliant
Cable length	0.3 m
Cable cross section	3 x 0.5 mm²
Process connection	M18 × 1
Power on display	LED, green

Wiring Diagram

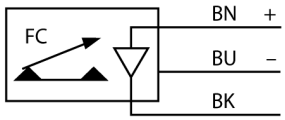

Functional principle

Our insertion - flow sensors operate on the principle of thermodynamics. The measuring probe is heated by several °C as against the flow medium. When fluid moves along the probe, the heat generated in the probe is dissipated. The resulting temperature is measured and compared to the medium temperature. The flow status of every medium can be derived from the evaluated temperature difference. Thus TURCK's wear-free flow sensors reliably monitor the flow of gaseous and liquid media.

Edition • 2017-08-14T08:37:29+02:00