Flow monitoring
Immersion sensor with integrated processor
FCS-M18-LIX/D241

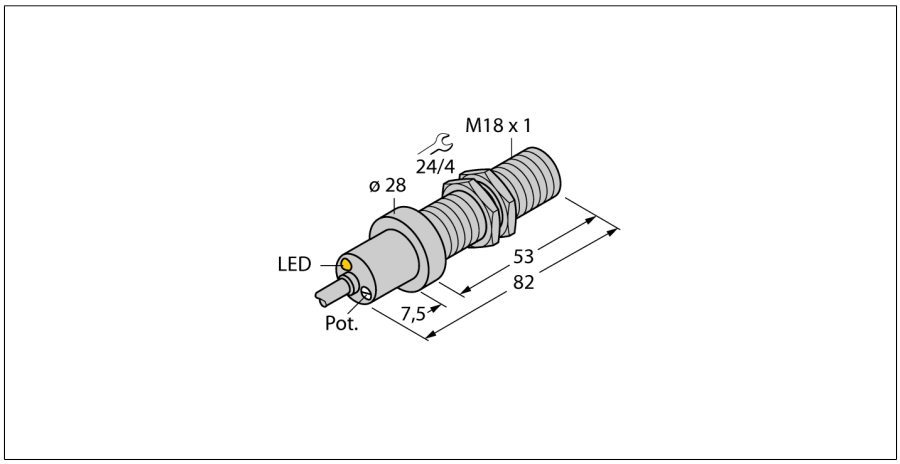

- **Immersion sensor for gaseous media**
- **Calorimetric functionality**
- **Referenced to air**
- **Customized characteristic**
- **Media temperature -20…+70 °C**
- **POWER-ON LED**
- **Sensor material: Chrome-plated brass**
- **Sensor cable with end sleeves, 1 m**
- **Conductors individually marked**
- **DC 3-wire, 19.2…28.8 VDC**
- **4…20 mA analog output**

Type designation	FCS-M18-LIX/D241
Ident no.	6870723
Mounting conditions	Immersion sensor
Air Operating Range	0.5…15 m/s
Stand-by time	20…40 s
Setting time	typ. 2 s
Temperature gradient	≤ 200 K/min
Medium temperature	-20…+70 °C
Ambient temperature	-20…+70 °C
Operating voltage	19.2…28.8 VDC
Current consumption	≤ 70 mA
Output function	Analog output
Short-circuit protection	yes
Reverse polarity protection	yes
Current output	4…20 mA
Load	200…500 Ω
Housing material	Metal, CuZn
Sensor material	Brass, brass, nickel-plated
Electrical connection	Nexans Flamex SH20 EN 50306-compliant
Cable length	1 m
Cable cross section	3 x 0.5 mm²
Process connection	M18 × 1
Power on display	LED, green

Wiring Diagram

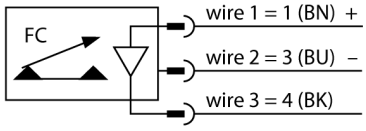

Functional principle

Our insertion - flow sensors operate on the principle of thermodynamics. The measuring probe is heated by several °C as against the flow medium. When fluid moves along the probe, the heat generated in the probe is dissipated. The resulting temperature is measured and compared to the medium temperature. The flow status of every medium can be derived from the evaluated temperature difference. Thus TURCK's wear-free flow sensors reliably monitor the flow of gaseous and liquid media.

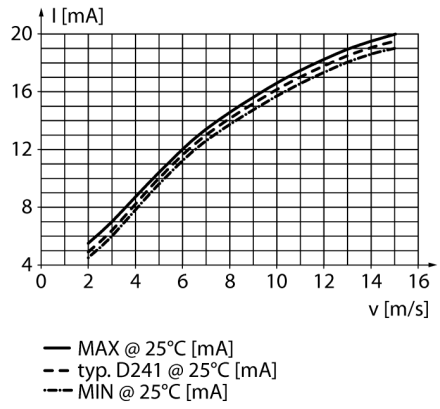

Edition • 2017-08-14T09:09:26+02:00

Flow monitoring
Immersion sensor with integrated processor
FCS-M18-LIX/D241

Industrial Automation

Reference conditions

Flow profile	80 x 50 mm (w x h)
Immersion depth	15 mm
Medium	Air
Flow direction	Probe approached on cable outlet side
Start-up length	800 mm (no foreign bodies)
Medium temperature	25 °C
Media pressure	1 bar absolute
Flow speed	15…0 m/s (within 300 s)

Output current acc. to reference conditions

Flow speed v [m/s]	I_{MAX} [mA]	I_{TYP} [mA]	I_{MIN} [mA]
2	5.5	4.9	4.5
3	7	6.4	6
5	10.4	10	9.6
7	13.4	13	12.6
10	16.6	16.15	15.7
12.5	18.6	18.15	17.7
14	19.5	19.05	18.6
15	20	19.5	19

Edition • 2017-08-14T09:09:26+02:00

 Hans Turck GmbH & Co.KG ● D-45472 Mülheim an der Ruhr ● Witzlebenstraße 7 ● Tel. 0208 4952-0 ● Fax 0208 4952-264 ● more@turck.com ● www.turck.com