Mounting Accessories
Weld-On Plate for Mounting Clamps
BSS-SPV2

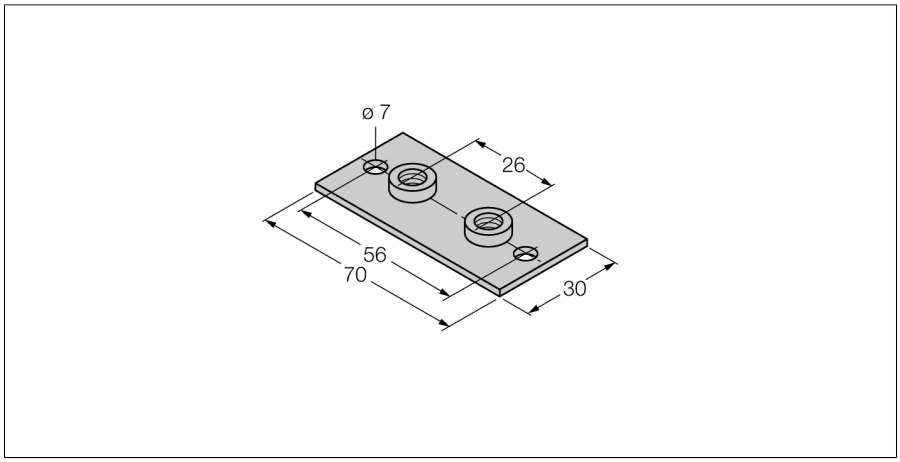

- Weld-On Plate for Mounting Clamps
- Material: Metal, ST 37

General description

The portfolio of mounting brackets consists of two half-shells and two Allen screws each. Optionally welding plates with additional drilling holes can be used. Matching DIN rail nuts are available for the mounting of DIN rails.

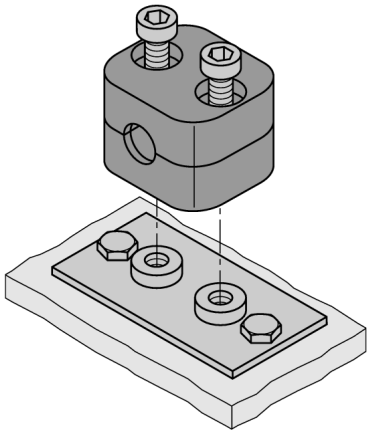

Type	BSS-SPV2
ID	6901316

Dimensions	30 x 70 mm
Housing material	Metal, ST 37

Edition • 2025-02-26T14:24:10+01:00