Mounting Accessories
Quick-Mount Bracket
QM-30

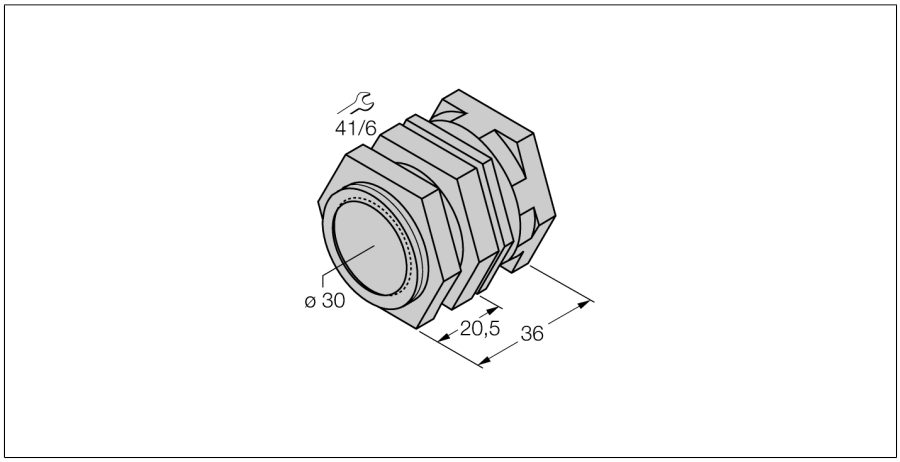

- Quick-mount bracket with dead-stop;
- Material: Chrome-plated brass
- Male thread M36 x 1.5

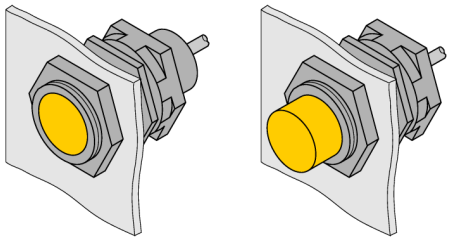

Type	QM-30
ID	6945103

Design	Accessories for threaded barrel, M30
Dimensions	35 mm
Housing material	Metal, CuZn, Chrome-plated
Max. tightening torque of housing nut	25 Nm
Tightening torque fixing screw	15 Nm

Edition • 2025-02-26T14:27:47+01:00