Mounting accessories for cylinders KLP 25-VA

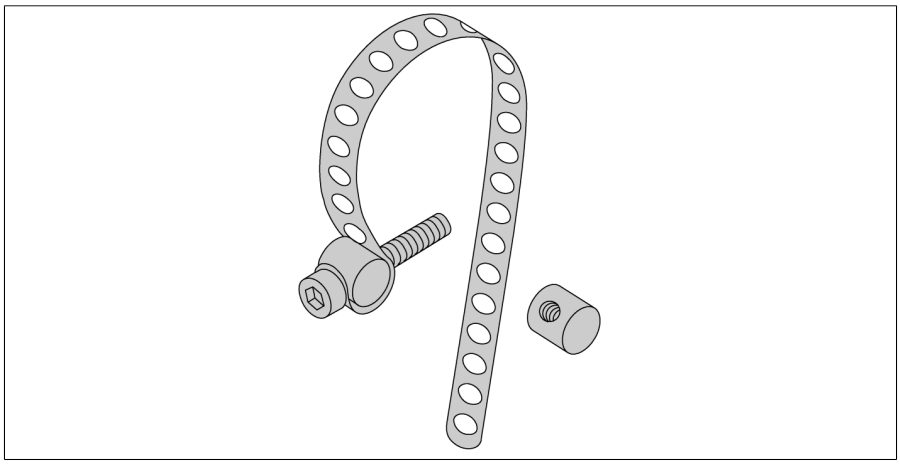

Mounting kit consisting of retaining strap, cylinder diameters of 8…25 mm; (material: stainless steel), 2 tie bolts (material: brass) cylinder screw M3 x 20; DIN 912-A20

General description

The sensor programme comprises inductive, magnetic-inductive, capacitive, photoelectric and ultrasonic sensors as well as pressure and flow controls.

A broad range of practice-oriented accessories ensure optimal adaption to your system.

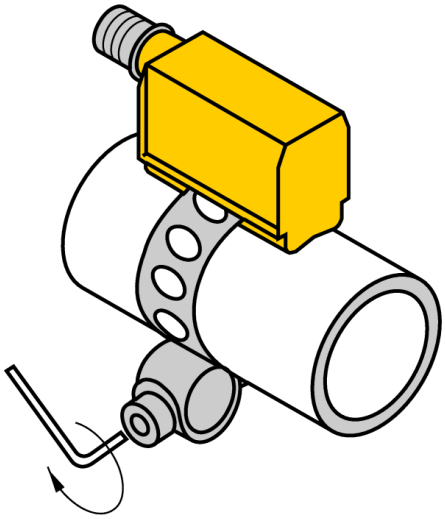

Type code	KLP 25-VA
Ident no.	6965301

Construction	accessories for rectangular types, PST
Dimensions	100 x 7 mm
Housing material	metal, V2A (1.4301)
Fixing clamp for correspondent cylinder diameter	8...25 mm mm

Edition • 2014-09-13T16:34:04+02:00

Hans Turck GmbH & Co.KG ● D-45472 Mülheim an der Ruhr ● Witzlebenstraße 7 ● Tel. 0208 4952-0 ● Fax 0208 4952-264 ● more@turck.com ● www.turck.com