Flow monitoring
MK96 for flow sensors
MK96-11-R/24VDC

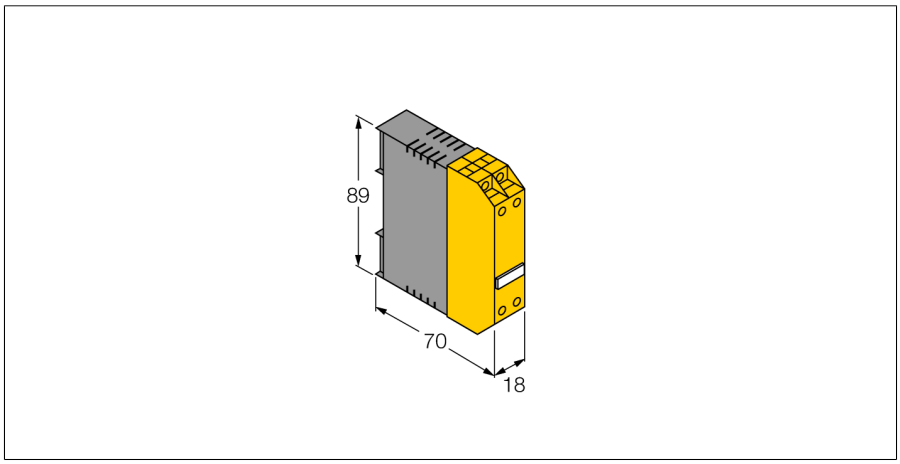

- **For connection of a standard flow sensor**
- **Adjustment via potentiometer**
- **6 LEDs for display of the flow state**
- **2-wire DC, 19.2…28.8 VDC**
- **NO contact, relay output**

Wiring diagram

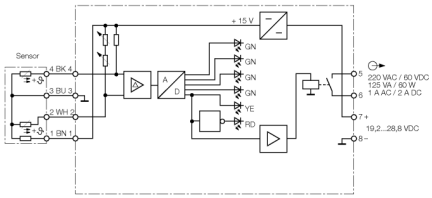

Type code	MK96-11-R/24VDC
Ident no.	7525000
Ambient temperature	-20…60 °C
Operating voltage	19.2…28.8VDC
Current consumption	≥ 70 mA
Output function	Relay output, NO contact
IP Rating	IP20
Protection class (terminals/housing)	IP20 / IP40
Construction	terminal chamber
Dimensions	70 x 18 x 89 mm
Housing material	polycarbonate/ABS
Connection	Terminal chamber
Switching state	LED chain green / yellow / red
Indication: Drop below setpoint	LED red
Indication: Setpoint reached	LED yellow
Indication: Setpoint exceeded	4 x LEDs green

Functional principle

Signal processors not only supply insertion and inline sensors with voltage, they also process and display the measured signals. Devices with MK96…, MS96… and MC96… housing styles are available. The individual housing styles are designed for different operating voltages and feature various output and supplementary functions. For intrinsically safe flow sensors it is required to use signal processors with intrinsically safe control circuits of the series MS96…Ex… and MC96…Ex… .

Edition • 2015-07-28T07:11:42+02:00

Hans Turck GmbH & Co.KG ● D-45472 Mülheim an der Ruhr ● Witzlebenstraße 7 ● Tel. 0208 4952-0 ● Fax 0208 4952-264 ● more@turck.com ● www.turck.com