NI20U-S30-VP6X-H1141
Inductive Sensor

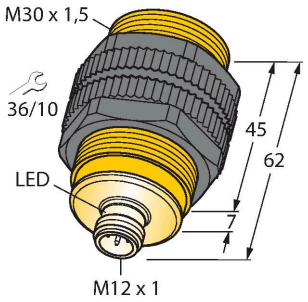

Technical data

Type	NI20U-S30-VP6X-H1141
Ident. no.	100000774
Rated switching distance	20 mm
Mounting conditions	Non-flush
Secured operating distance	≤ (0.81 × Sn) mm
Repeat accuracy	≤ 2 % of full scale
Temperature drift	≤ ± 10 %
	≤ ± 15 %, ≤ -25 °C v ≥ +70 °C
Hysteresis	3…15 %
Ambient temperature	-30…+85 °C
Operating voltage	10…30 VDC
Residual ripple	≤ 10 % U_{ss}
DC rated operational current	≤ 200 mA
No-load current	≤ 20 mA
Residual current	≤ 0.1 mA
Isolation test voltage	≤ 0.5 kV
Short-circuit protection	yes / Cyclic
Voltage drop at I_e	≤ 1.8 V
Wire breakage/Reverse polarity protection	yes / Complete
Output function	4-wire, Complementary contact, PNP
Insulation class	⧈
Switching frequency	1 kHz
Design	Threaded barrel, M30 × 1.5
Dimensions	62 mm

Features

- Threaded barrel, M30 x 1.5
- Plastic, LCP
- Factor 1 for all metals
- Protection class IP68
- Resistant to magnetic fields
- Extended temperature range
- High switching frequency
- DC 4-wire, 10…30 VDC
- Changeover contact, PNP output
- M12 x 1 male connector

Wiring diagram

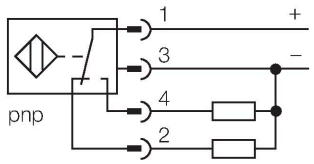

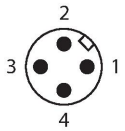

Functional principle

Inductive sensors are designed for wear-free and contactless detection of metal objects. uprox Factor 1 sensors have significant advantages due to their patented ferrite-coreless multi-coil system. They detect all metals at the same large switching distance and are resistant to magnetic fields.

NI20U-S30-VP6X-H1141| 09/09/2020 16-24 | technical changes reserved

Technical data

Housing material	Plastic, LCP
Active area material	Plastic, LCP
Max. tightening torque housing nut	5 Nm
Electrical connection	Connector, M12 × 1
Vibration resistance	55 Hz (1 mm)
Shock resistance	30 g (11 ms)
Protection class	IP68
MTTF	874 years acc. to SN 29500 (Ed. 99) 40 °C
Switching state	LED

Mounting instructions

Mounting instructions/Description

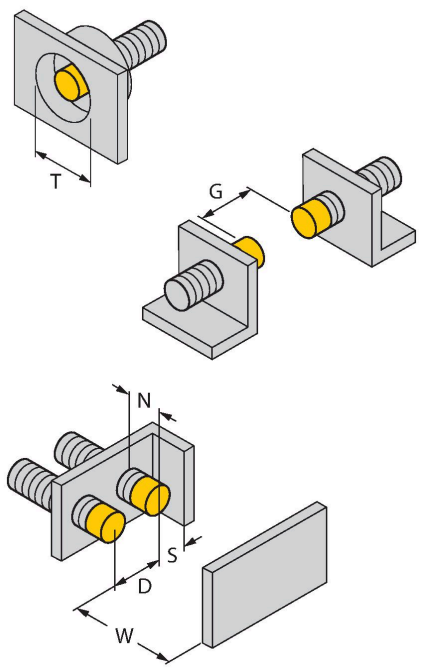

Distance D	3 x B
Distance W	3 x Sn
Distance T	3 x B
Distance S	1.5 x B
Distance G	6 x Sn
Distance N	2 x Sn
Diameter active area B	Ø 30 mm

NI20U-S30-VP6X-H1141| 09/09/2020 16-24 | technical changes reserved

Accessories

QM-30	6945103
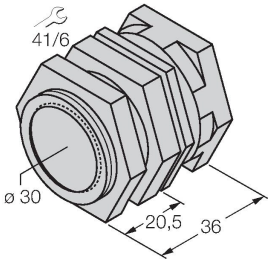	Quick-mount bracket with dead-stop; material: Chrome-plated brass. Male thread M36 × 1.5. Note: The switching distance of the proximity switches may change when using quick-mount brackets.

BST-30B	6947216
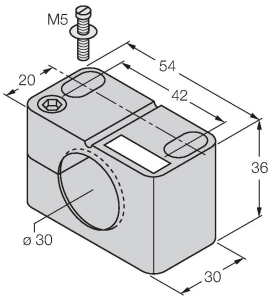	Mounting clamp for threaded barrel sensors, with dead-stop; material: PA6

MW-30	6945005
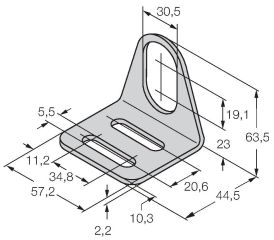	Mounting bracket for threaded barrel sensors; material: Stainless steel A2 1.4301 (AISI 304)

BSS-30	6901319
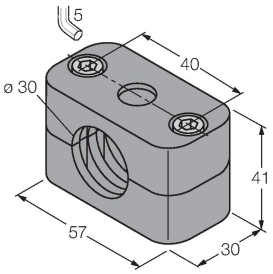	Mounting clamp for smooth and threaded barrel sensors; material: Polypropylene

Wiring accessories

Dimension drawing	Type	Ident. no.	
	RKC4.4T-2/TEL	6625013	Connection cable, female M12, straight, 4-pin, cable length: 2 m, sheath material: PVC, black; cULus approval; other cable lengths and qualities available, see www.turck.com

NI20U-S30-VP6X-H1141| 09/09/2020 16-24 | technical changes reserved