FS100-300L-66-2LI-H1141
Flow Sensor

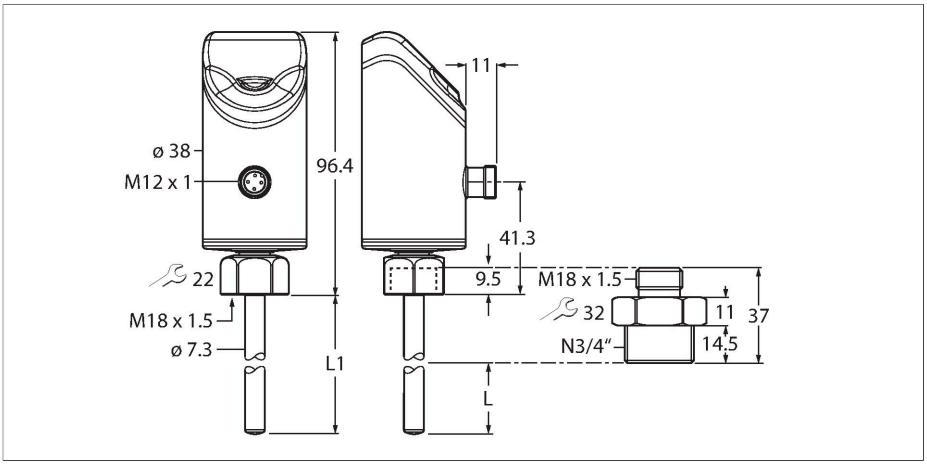



Technical data

Type	FS100-300L-66-2LI-H1141
ID no.	100001039
Medium temperature	-25…+85 °C
Application area	
Mounting	Immersion sensor
Application area	liquids
Bar length (L1)	93 mm
Immersion depth (L)	64.9 mm(when using the supplied adapter)
Process Pressure	300 bar
Flow Monitoring	
Response time T09	6 s
Response time T05	3 s
Standard flow range	3…300 cm/s
	Any axial alignment of the sensor rod in the medium
Extended flow range	1…300 cm/s
Extended flow range comment	Directed inflow to punch mark ±20 °
Reproducibility	0.2…5 cm/s; for water 3…100 cm/s; 10…80 °C
Temperature drift	0.5 cm/s × 1/K
Temperature gradient	≤ 300 K/min
Temperature monitoring	
Measuring range	-25…85 °C
Switching point accuracy	± 2 K; for water >3 cm/s

Features

- Screw-in adapter with process connection N3/4" male thread included in delivery
- Electronics housing material/medium contact 1.4404 (316L)/1.4571 (316Ti)
- Immersion depth 64.9 mm
- Process value display with bar graph
- Flow monitoring for liquid media
- Protection classes IP66, IP67 and IP69K
- Adjustment of flow speed via teach function
- 17…33 VDC
- Analog output 4…20 mA
- M12 × 1 male connector

Wiring diagram

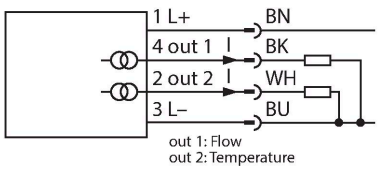

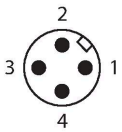

Functional principle

The flow sensor functions according to the calorimetric principle. The distinctive feature of this principle is that the flow rate correlates directly to the thermal loss of energy in

FS100-300L-66-2LI-H1141| 07/22/2021 11-55 | technical changes reserved

Technical data

Reproducibility	± 0.5 K
Resolution	0.5 K
Response time T09	12 s
Response time T05	3 s
Electrical data	
Operating voltage	17…33 VDC
Short-circuit/reverse polarity protection	yes
Power consumption	≤ 1.6 W(typ. 1.3 W)
Overload protection	Yes
Insulation class	III
Standby delay time	18…30 s
Outputs	
Output 1	Flow: Analog (non-linear)
Output 2	Temperature: Analog
Output function	Analog output
Current output	4…20 mA
Current output note	4…20 mA corresponds to -40…180 °C
Load resistance current output	≤ 0.5 kΩ
Mechanical data	
Housing material	Stainless steel, 1.4404 (AISI 316L)
Adapter material	Stainless Steel 1.4571 (316Ti)
Materials (contact with media)	Stainless steel 1.4571 (AISI 316Ti), FKM O-ring
Roughness of material (medium contact)	R_z ≤ 6.4 µm
Process connection	3/4" NPT male thread
Process connection sensor	M18 x 1.5 female thread
Process connection adapter	M18 × 1.5 male thread; 3/4" NPT male thread
Electrical connection	Connector, M12 × 1
Protection class	IP66 IP67 IP69K
Electromagnetic compatibility (EMC)	DIN EN 61326-2-3: 2007
Environmental conditions	
Ambient temperature	-40…+85 °C
Storage temperature	-40…+100 °C
Shock resistance	50 g (11 ms) , EN 60068-2-27
Vibration resistance	20 g (55…2000 Hz)DIN EN 60068-2-6

the probe. The increased loss of energy is therefore a direct measure of an increased flow rate.

FS100-300L-66-2LI-H1141| 07/22/2021 11-55 | technical changes reserved

Technical data

Tests/approvals	
Approvals	CE cULus submitted
Display	LED display functions for status of supply voltage and teach processes. Process indicators via bar graph.
MTTF	120 years acc. to SN 29500 (Ed. 99) 40 °C

Mounting instructions

FS100-300L-66-2LI-H1141| 07/22/2021 11-55 | technical changes reserved

Product features

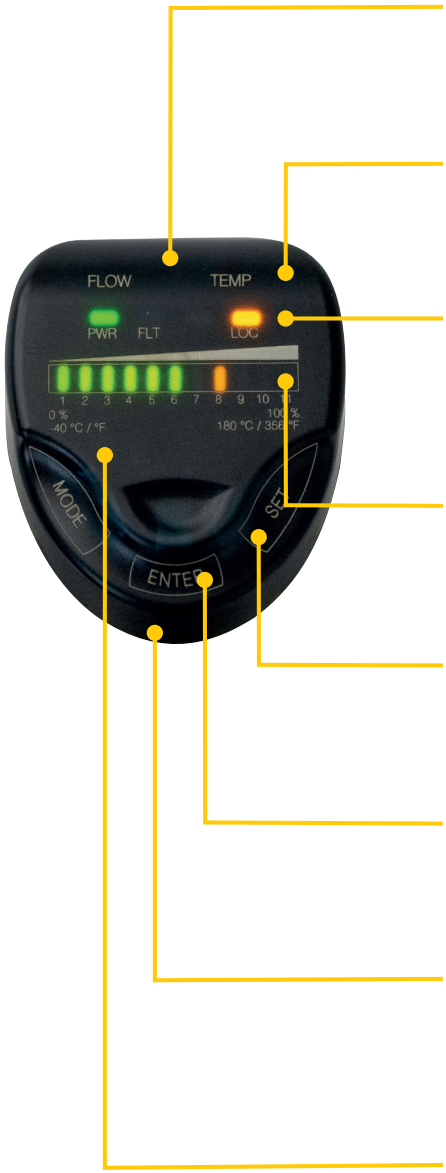

Inclined display
The user interface is tilted by 45°, offering a high level of comfort when operating and reading values.

FLOW and TEMP LEDs
Two LED displays which are visible from almost all directions indicate the status of the outputs and the active teach mode.

Status LEDs
Additional LED displays provide information about the status of the power supply, faults and the locking function and—if available—IO-Link communication.

Process value display
The generous 11-segment bicolor LED bar displays either the flow or temperature values in an easy-to-read manner.

Label
The translucent front cap and the metal housing are scratch-resistant and are inscribed in a contrasting color using a laser.

MODE, ENTER and SET
Touch pads allow menus to be navigated reliably — without wear and tear and with no need for additional sealing.

Alignment
The sensor head can be freely rotated within a range of 340°, simplifying the alignment of the electrical connection and user interface following installation.

Translucent front cap
The front cap is made from scratch-resistant, temperature-resistant, translucent plastic.

Modular Concept
The portfolio exhibits a variable and modular mechanical concept. The neutral M18 coupling nut on the sensor and the various screw-in adapters allow a variable process connection based on the usage requirements. Fast and flexible thanks to using neutral stock and spare parts as required.

Temperature measurement
Based on the calorimetric principle, the sensor also offers the option, in addition to monitoring the flow rate, of measuring the medium temperature. If in addition to the flow rate the medium temperature is also important, both process variables can be determined and evaluated independently of each other.

DeltaFlow
The implemented DeltaFlow monitoring supports error-free teaching by only enabling all teach processes once the flow rate to be monitored has settled at a constant level.

Programmable NO/NC
The switching outputs can optionally be used as normally open or normally closed. If the sensors have more than one switching output, these can be configured differently. Each switching output is configured as normally open by default.

Back to pre- and factory settings
Both Back to functions offer the option of resetting the current settings. Back to Pre-Settings replaces the current settings with the previous settings. Back to Factory Settings resets the sensor to the factory settings.

Lock function (Loc/unLoc)
The touch buttons can be locked/unlocked. When the key lock is activated, a teach-in process cannot be initiated. This prevents parameters from being modified accidentally, for example.

Teach functions (Quick and MAX/MIN)
Quick Teach allows quick teaching in of the switchpoint without teaching in a separate MAX/MIN range. With MAX/MIN Teach on the other hand, the flow range to be monitored is scaled to two limit values to be taught and the switchpoint is set within these two limits. Sensors with a switching output have both modes, whereas sensors without a switching output only have MAX/MIN Teach.

FS100-300L-66-2LI-H1141| 07/22/2021 11-55 | technical changes reserved

LED display

LED	Color	Status	Description
PWR	Green	On	Operating voltage applied Device is operational
FLT	Red	On	Error displayed (for error pattern in combination with LEDs see manual)
		Off	No errors displayed
LOC	Yellow	On	Device locked
		Off	Device unlocked
		Flashing	Locking/unlocking process active
FLOW	Yellow	Flashing	Teach mode/display of diagnostic data (see manual for specification)
TEMP	Yellow	Flashing	Teach mode/display of diagnostic data (see manual for specification)

For a detailed description of the display patterns and flashing codes see manual/operating instructions FS100 — compact flow sensors (D100002658)

FS100-300L-66-2LI-H1141| 07/22/2021 11-55 | technical changes reserved