FP100-300L-30-NA-H1141
Flow Probe

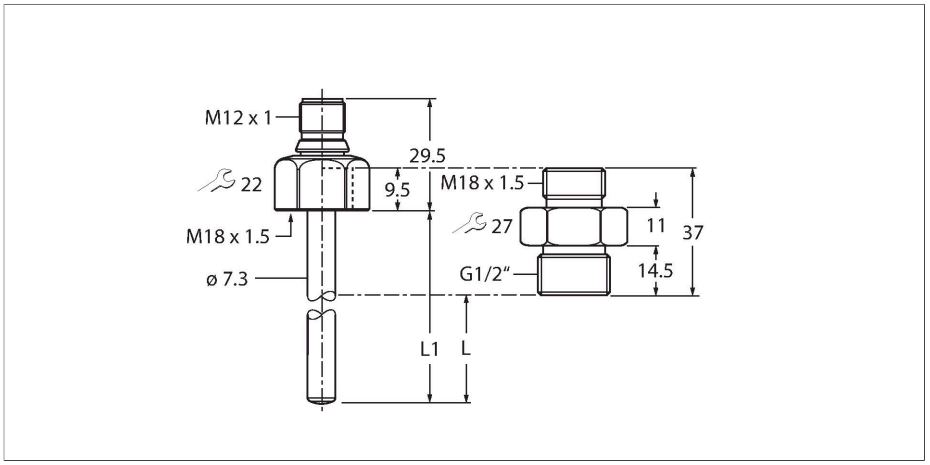

Technical data

Type	FP100-300L-30-NA-H1141
ID no.	100001044
Medium temperature	-25…+85 °C
Application area	
Mounting	Immersion sensor
Application area	liquids
Bar length (L1)	45 mm
Immersion depth (L)	16.9 mm(when using the supplied adapter)
Process Pressure	300 bar
Response time T09	6 s
Response time T05	3 s
Standard flow range	3…300 cm/s
	Any axial alignment of the sensor rod in the medium
Extended flow range	1…300 cm/s
Extended flow range comment	Directed inflow to punch mark ±20 °
Temperature gradient	≤ 300 K/min
Mechanical data	
Housing material	Stainless steel, 1.4571 (AISI 316Ti)
Adapter material	Stainless steel 1.4571 (316Ti)
Materials (contact with media)	Stainless steel 1.4571 (AISI 316Ti), AFM flat seal
Process connection sensor	M18 x 1.5 female thread

Features

- Screw-in adaptor with process connection G1/2" male thread included in delivery
- Housing material: 1.4571 (316Ti)
- Immersion depth 16.9 mm
- Flow monitoring for liquid media
- Protection classes IP6K6K, IP6K7 and IP6K9K
- 8…33 VDC
- NO/NC contact, PNP/NPN output, IO-Link
- Connector, M12 × 1

Wiring diagram

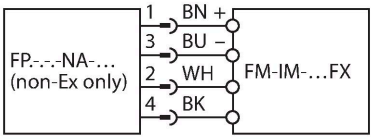

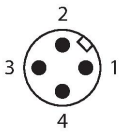

Functional principle

The flow sensor functions according to the calorimetric principle. The distinctive feature of this principle is that the flow rate correlates directly to the thermal loss of energy in the probe. The increased loss of energy is therefore a direct measure of an increased flow rate.

FP100-300L-30-NA-H1141| 07/22/2021 11-54 | technical changes reserved

Technical data

Process connection adapter	M18 × 1.5 male thread; G 1/2" male thread
Electrical connection	Connector, M12 × 1
Protection class	IP66 IP67 IP69K
Environmental conditions	
Ambient temperature	-40…+85 °C
Storage temperature	-40…+100 °C
Shock resistance	50 g (11 ms) , EN 60068-2-27
Vibration resistance	20 g (55…2000 Hz)DIN EN 60068-2-6
Tests/approvals	
Approvals	CE cULus submitted
MTTF	120 years acc. to SN 29500 (Ed. 99) 40 °C

FP100-300L-30-NA-H1141| 07/22/2021 11-54 | technical changes reserved