FP100-300L-63-NA-H1141
Flow Meter – Immersion Sensor without Integrated Processing Unit

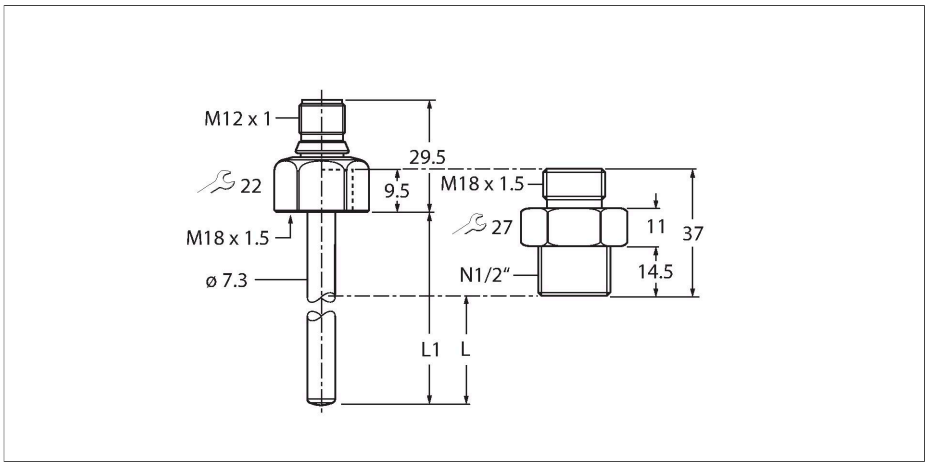

Technical data

Type	FP100-300L-63-NA-H1141
ID	100001050
Medium temperature	-25…+85 °C
Mounting	Immersion sensor
Application area	liquids
Process Pressure	300 bar
Temperature gradient	≤ 300 K/min
Mechanical data	
Housing material	Stainless steel, 1.4571 (AISI 316Ti)
Electrical connection	Connector, M12 × 1
Protection class	IP66 IP67 IP69K
Ambient temperature	-40…+80 °C
	(UL: -25…+80 °C)
Storage temperature	-40…+80 °C
Tests/approvals	
UL registration number	E516036
MTTF	120 years acc. to SN 29500 (Ed. 99) 40 °C

Technical data

ID	100001050
Type	FP100-300L-63-NA-H1141

Features

- Screw-in adaptor with process connection NPT 1/2" male thread included in delivery
- Housing material: 1.4571 (316Ti)
- Immersion depth 41.9 mm
- Flow monitoring for liquid media
- Protection classes IP66, IP67 and IP69K
- Connector, M12 × 1

Wiring diagram

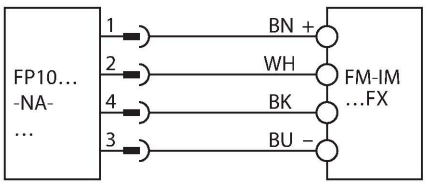

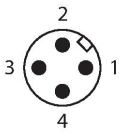

FP100-300L-63-NA-H1141| 05/06/2024 21-08 | technical changes reserved

Technical data

Mounting	Immersion sensor
Application area	liquids
Temperature gradient	≤ 300 K/min
Medium temperature	-25…+85 °C
Ambient temperature	-40…+80 °C
Protection class	IP66 IP67 IP69K
MTTF	120 years acc. to SN 29500 (Ed. 99) 40 °C
Mechanical data	
Design	Without display (integrated probe), FP100
Housing material	Stainless steel, 1.4571 (AISI 316Ti)
Electrical connection	Connector, M12 × 1
Process Pressure	300 bar
Tests/approvals	
Approvals	CE cULus
UL registration number	E516036

FP100-300L-63-NA-H1141| 05/06/2024 21-08 | technical changes reserved