LS-534-0700-LIU24PN8X-H1181
Level Sensor – With Analog Output and 4 × Switching Outputs

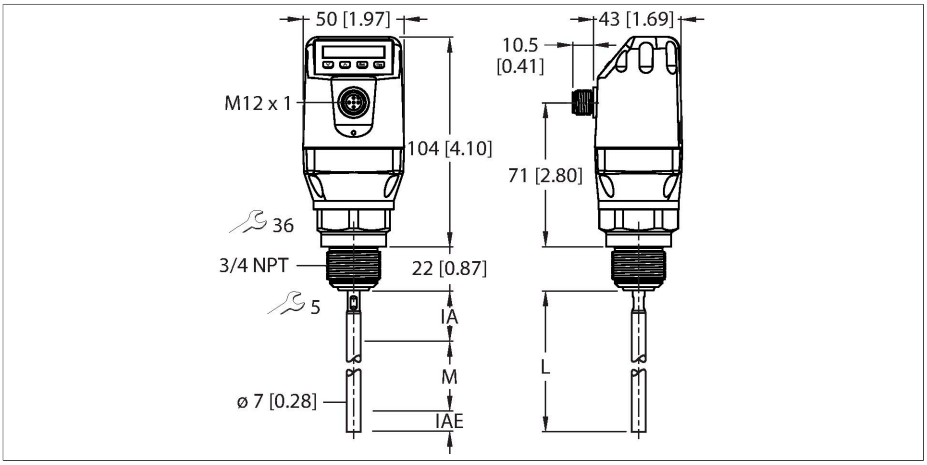



Technical data

Type	LS-534-0700-LIU24PN8X-H1181
ID no.	100001871
Remark to product	Attention: Coaxial tubes (accessories) are only available for LS-551 level sensors with process connection G3/4".
Medium temperature	-20…+100 °C
Application area	liquids
Probe length (L)	700 mm
Max. loading of probe	6 Nm
Probe accuracy	± 5 mm
Temperature drift	≤ 0.1
Hysteresis	≥ 2 mm
Repeatability	≤ 2 mm
Inactive area at process connection	25 mm
Inactive area at probe end	10 mm
Dielectric constant	≥ 5
Pressure resistance	-1…10 bar
Electrical data	
Operating voltage	12…30 VDC
Current consumption	≤ 100 mA
Short-circuit/reverse polarity protection	yes / yes
Inductive load	< 1 H
Capacitive load	100 nF
Insulation class	III

Features

- Multiple output signals: one system for both level detection and continuous level monitoring
- Low maintenance and quick commissioning without calibration
- High flexibility due to cutable probe
- Compact, rotatable display housing ensures easy installation
- Small inactive areas, ideal for small containers
- Process temperature to 212 °F
- Process pressure up to 145 psi
- Coaxial tubes available for non-metallic tanks
- IO-Link 1.1
- 12…30 VDC
- 1x analog output 4… 20 mA/0… 10 V (automatic switchover depending on load)
- 1x transistor output (PNP) or IO-Link
- 3x transistor output (PNP/NPN switchable)
- Process connection NPT 3/4" male thread
- Probe length 700 mm

Wiring diagram

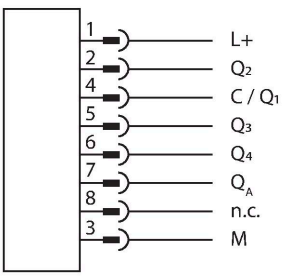

LS-534-0700-LIU24PN8X-H1181| 07/22/2021 11-57 | technical changes reserved

Technical data

Outputs	
Output 1	Analog output (current/voltage, automatic switching depending on load)
Output 2	IO-Link/switching output (PNP)
Output 3	Switching output (PNP/NPN)
Output 4	Switching output (PNP/NPN)
Output 5	Switching output (PNP/NPN)
Switching output	
Communication protocol	IO-Link
Output function	NO/NC, PNP/NPN, analog output
Analog output	
Current output	4…20 mA
High level signal current	20…20.5 mA
Low level signal current	3.8…4 mA
Load resistance current output	≤ 0.5 kΩ
Voltage output	0…10 V
High level signal voltage	Uv - 2 V
Low level signal voltage	≤ 2 V
Load resistance voltage output	≥ 0.75 kΩ
Response time typical	< 400 ms
IO-Link	
IO-Link specification	V 1.1
IO-Link port type	Class A
Transmission physics	COM 2 (38.4 kBaud)
Frame type	2.2
Included in the SIDI GSDML	Yes
Mechanical data	
Housing material	Plastic, PBT
Materials (contact with media)	Stainless steel 1.4404 (AISI 316L), PTFE, FKM
Process connection	3/4" NPT male thread
Electrical connection	Connector, M12 × 1
Protection class	IP67
Environmental conditions	
Ambient temperature	-20…+60 °C
Storage temperature	-40…+80 °C
Tests/approvals	
Approvals	UL
UL registration number	E356899

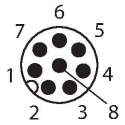

Functional principle

The LS-5 series liquid level sensors uses time-of flight technology to measure electromagnetic waves to generate a level signal. The advanced technology enables calibration free commissioning with probes that can be cut to length for quick integration into most applications. Highly resistant to deposit formations with no moving parts, the LS-5 series offers significant cost saving due to multiple output signals for both continuous level detection and point level monitoring. Simply setup with four buttons and integral display, or through an IO-Link interface

LS-534-0700-LIU24PN8X-H1181| 07/22/2021 11-57 | technical changes reserved

Technical data

Display functions	
Display	Digital display
MTTF	194 years

LS-534-0700-LIU24PN8X-H1181| 07/22/2021 11-57 | technical changes reserved