BIM-UNC-AP6X-0.3-RS4
Magnetic Field Sensor – For Pneumatic Cylinders

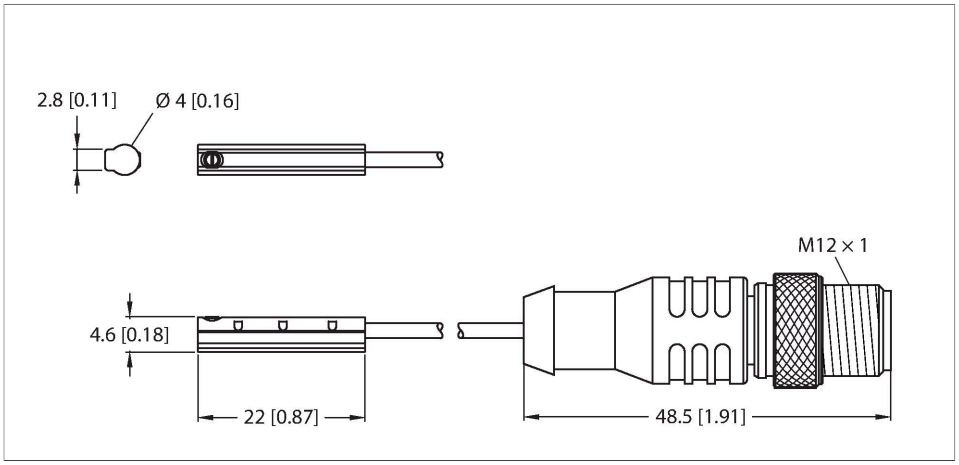

Features

- For SMC C-groove cylinders without mounting accessories
- One-hand mounting possible
- Stable mounting
- Magneto-resistive sensor
- DC 3-wire, 11…30 VDC
- NO contact, PNP output
- Pigtail with M12 × 1 male connector

Wiring diagram

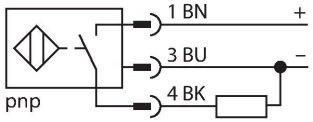

Technical data

Type	BIM-UNC-AP6X-0.3-RS4
ID	100001906
General data	
Pass speed	≤ 0.3 m/s
Repeatability	≤ ± 0.1 mm
Temperature drift	≤ 0.3 mm
Hysteresis	≤ 1 mm
Electrical data	
Operating voltage U_B	11…30 VDC
Ripple U_{ss}	≤ 10 % U_{Bmax}
DC rated operating current I_e	≤ 100 mA
No-load current	≤ 15 mA
Residual current	≤ 0.1 mA
Isolation test voltage	0.5 kV
Short-circuit protection	yes/Cyclic
Voltage drop at I_e	≤ 1.8 V
Wire break/reverse polarity protection	yes/Complete
Output function	3-wire, NO contact, PNP
Switching frequency	0.02 kHz
Mechanical data	
Design	Rectangular, UNC
Dimensions	22 x 4 x 4.6 mm
Housing material	Plastic, PP-GF20
Active area material	plastic, PP-GF20

Functional principle

Magnetic field sensors are activated by magnetic fields and are used, in particular, for the detection of the piston position in pneumatic cylinders. As magnetic fields can permeate non-magnetizable metals, they detect a permanent magnet attached to the piston through the aluminium cylinder wall.

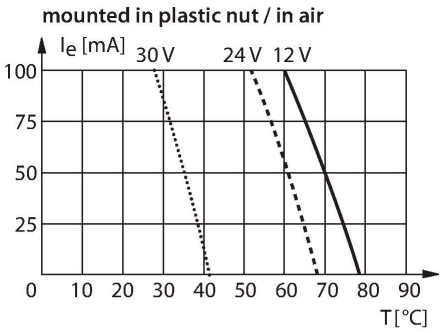

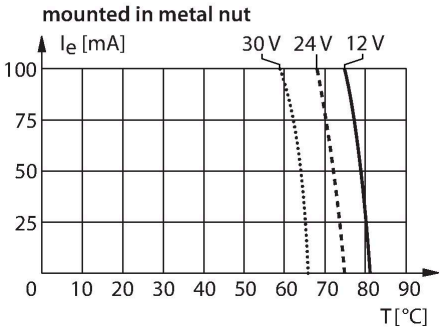

BIM-UNC-AP6X-0.3-RS4| 05/28/2025 13-17 | technical changes reserved

Technical data

Tightening torque fixing screw	0.1 Nm
Electrical connection	Cable with connector, M12 × 1
Cable quality	Ø 2 mm, Gray, Lif9Y-11Y, PUR, 0.3 m
Core cross-section	3 x 0.08 mm²
Litz wire	40 x0.05 mm
Environmental conditions	
Ambient temperature	-25…+70 °C
Vibration resistance	55 Hz (1 mm)
Shock resistance	30 g (11 ms)
Protection class	IP67
MTTF	2283 years acc. to SN 29500 (Ed. 99) 40 °C
Mounting on the following profiles	
Cylindrical design	#
Switching state	LED, Yellow
Included in delivery	Cable clip

Mounting instructions

Mounting instructions/Description

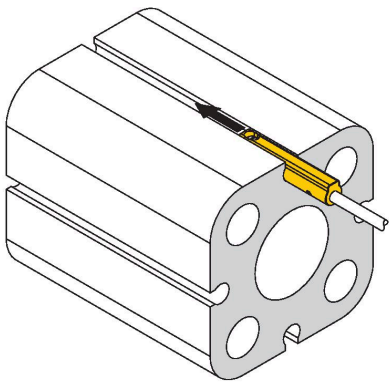

The sensor is mounted in the groove from the side. If the screw is turned clockwise, it moves out of the thread and pushes the sensor upwards towards the cylinder. This fixes the sensor in place. A quarter turn of the screw with a slotted screwdriver is sufficient to fasten the sensor so that it doesn't vibrate. A tightening torque of 0.1 Nm is sufficient for safe mounting without damaging the cylinder. A cable clip is included in the scope of delivery. It enables smooth cable routing in the groove and ensures that the cable is fastened as securely as possible. The corresponding accessories for mounting on other cylindrical housings must be ordered separately.

BIM-UNC-AP6X-0.3-RS4| 05/28/2025 13-17 | technical changes reserved