LTE2000M-HT10-LU10-P-0.25-H1151
Pressure-Resistant Linear Position Sensor – Analog

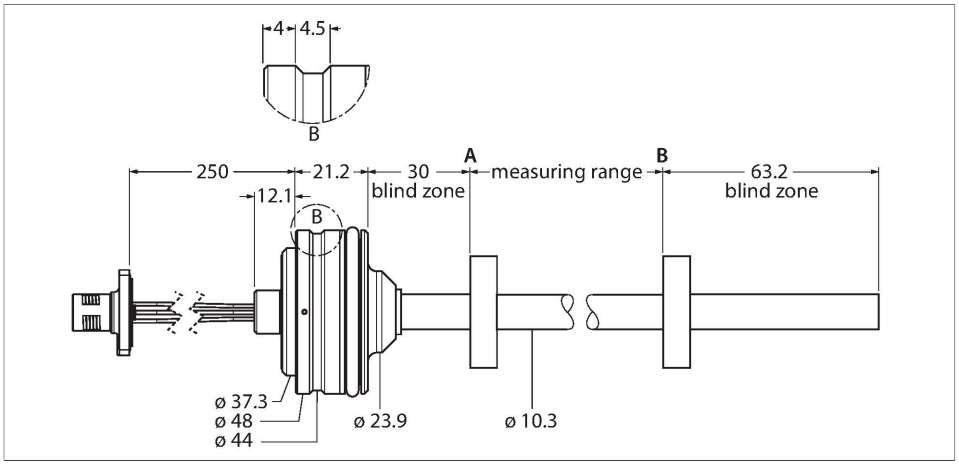

Technical data

Type	LTE2000M-HT10-LU10-P-0.25-H1151
Ident. no.	100002131
Measuring principle	Magnetostrictive
Measuring range	2000 mm
Resolution	16 bit
Blind zone a	30 mm
Blind zone b	63.2 mm
Repeat accuracy	≤ 0.01 % of full scale
Linearity deviation	≤ 0.04 %f.s.
Hysteresis	≤ 0.026 mm
Ambient temperature	-40…+85 °C
Operating voltage	8…30 VDC
Residual ripple	≤ 10 % U_{ss}
Isolation test voltage	≤ 0.5 kV
Wire breakage/Reverse polarity protection	yes (voltage supply)
Output function	5-pin, Analog output
Voltage output	0.5…4.5 V
Load resistance voltage output	≥ 2 kΩ
Current consumption	< 60 mA at 24 VDC
Design	Rod
Dimensions	2126.5 mm
Housing material	Stainless steel, 1.4305 (AISI 303)
Active area material	Stainless steel, 1.4404 (AISI 316L)
Electrical connection	Cable with connector, M12 × 1

Features

- Suited for hydraulic cylinders
- Embedded housing design
- The sensor is pressure resistant up to 340 bar (permanent), 680 bar (short-term)
- Adjustable measuring range
- Analog output 0.5…4.5 V
- 0.25 m cable with M12 male connector

Wiring diagram

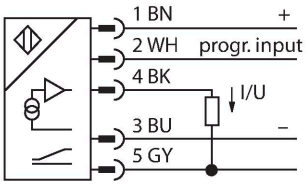

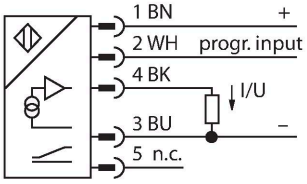

Functional principle

The LTE is a magnetostrictive sensor, optimized for precise position control in hydraulic cylinders.
The absolute value sensor is very robust and precise, and also saves the position information in the event of a voltage failure, rendering additional zeroing unnecessary. The sensors operate on the non-contact function principle and are thus wear and maintenance free.

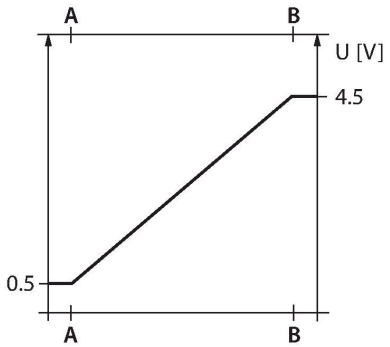

LTE2000M-HT10-LU10-P-0.25-H1151| 09/09/2020 16-59 | technical changes reserved

Technical data

Vibration resistance	30 Hz (1 mm)
Shock resistance	100 g (11 ms)
Protection class	IP68

Mounting instructions

Mounting instructions/Description

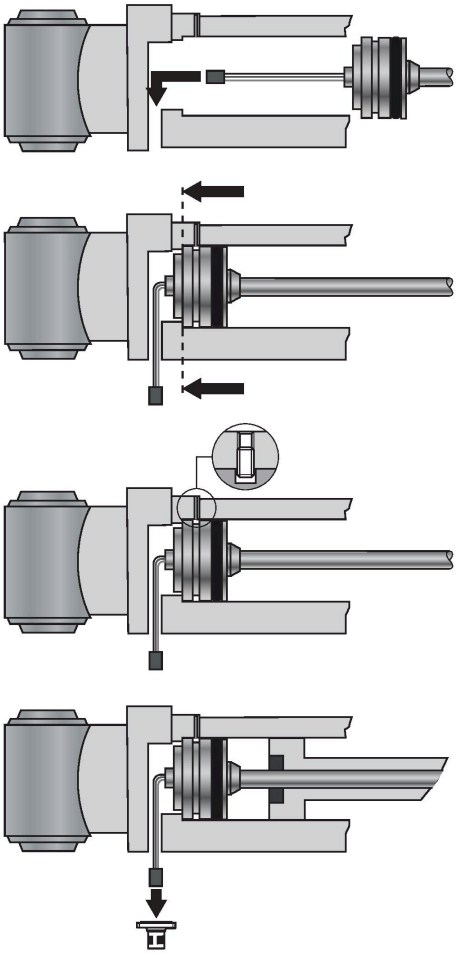

Mounting

To fasten the sensor, the end cap of the hydraulic cylinder must have an M18 × 1.5 threaded bore according to ISO 6149-1. For more information, refer to the operating instructions.

Accessories

STM-AL-R10	6900409

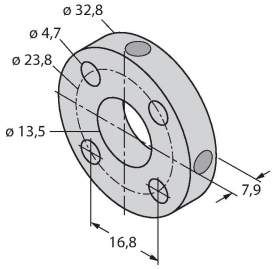

Standard 4-hole positioning element, material: Aluminum

STS-R10	6900411

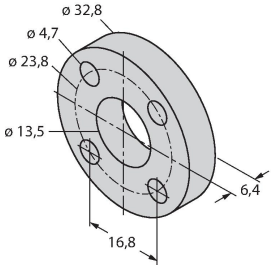

Standard spacer made of non-ferrous material for separating the positioning element from the base of the hydraulic piston rod

LTE2000M-HT10-LU10-P-0.25-H1151| 09/09/2020 16-59 | technical changes reserved

CM-R10	6900416

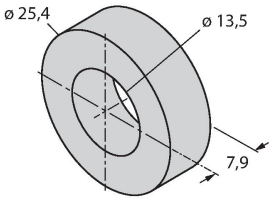

Standard positioning element, suitable for mounting in hydraulic cylinders

LTE2000M-HT10-LU10-P-0.25-H1151| 09/09/2020 16-59 | technical changes reserved