# PS510-10A-04-LI2UPN8-H1141
# Pressure Sensor – Absolute Pressure: 0…10 Bar

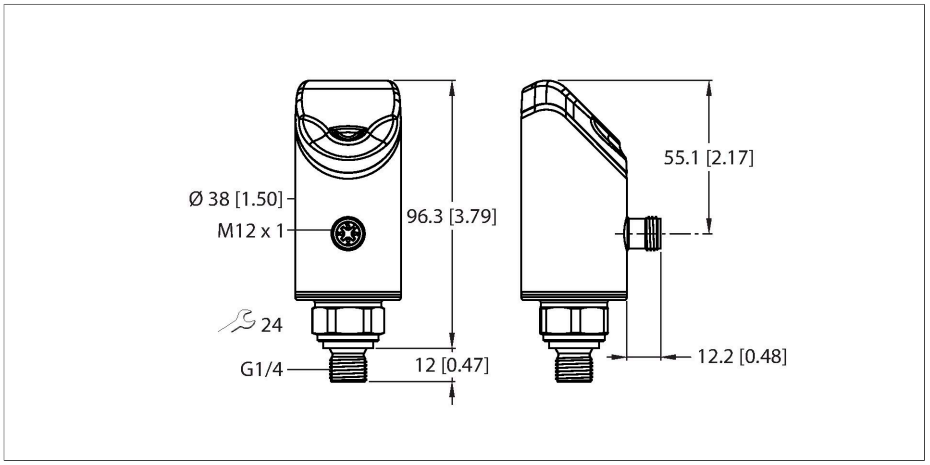




## Technical data

| | |
|---|---|
| Type | PS510-10A-04-LI2UPN8-H1141 |
| ID | 100003733 |
| Medium temperature | -40…+80 °C |
| **Pressure range** | |
| Pressure type | Absolute pressure |
| Pressure range | 0…10 bar |
| | 0…145.04 psi |
| | 0…1 MPa |
| Admissible overpressure | ≤ 100 bar |
| Burst pressure | ≥ 500 bar |
| Response time | Typically 1 ms (max. 2.5 ms) |
| Long-term stability | ± 0.2 % FS, /annum |
| Operating voltage $U_B$ | 18…33 VDC |
| Short-circuit/reverse polarity protection | yes, cyclic / yes (voltage supply) |
| Insulation class | III |
| **Outputs** | |
| Output 1 | Switching output or IO-Link mode |
| Output 2 | Analog or switching output |
| **Switching output** | |
| Communication protocol | IO-Link |
| Output function | NO/NC, PNP/NPN |
| Rated operational current | 0.25 A |
| Switching frequency | ≤ 300 Hz |
| Switching point distance | ≥ 0.5 % |

## Features

- 4-digit, 2-color (red/green), 12-segment display, rotatable by 180°
- Housing is rotatable after mounting the process connection
- Metal measuring cell
- 18…33 VDC
- NO/NC contact, PNP/NPN output, analog output (current/voltage), IO-Link SSP4.1.1
- Process connection G1/4" male thread
- Connector device, M12 × 1

## Wiring diagram

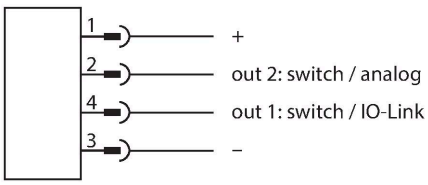


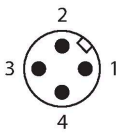


## Functional principle

The pressure sensors from the P510 product series operate with fully welded metal measuring cells. As a result of the pressure acting on the metal substrate, a signal that is proportional to the pressure is generated and processed electronically. Depending on

PS510-10A-04-LI2UPN8-H1141| 03/25/2026 21-33 | technical changes reserved

## Technical data

| | |
|---|---|
| Switch point: | (Min. + 0.005 × range)…100 % of full scale |
| Release point(s) | min. up to (SP - 0.005 × range) |
| Switching cycles | ≥ 100 mil. |
| **Analog output** | |
| Current output | 4…20 mA |
| Voltage output | 0…10 V |
| **IO-Link** | |
| IO-Link specification | V 1.1 |
| Transmission physics | corresponds to 3-wire physics (PHY2) |
| Transmission rate | COM 2/38.4 kbps |
| Process data width | 32 bit |
| Measured value information | 24 bit |
| Switching point information | 3 bit |
| Frame type | 2.2 |
| Programming | FDT/DTM |
| Profile support | Smart Sensor Profile (SSP4.1.1) |
| Included in the SIDI GSDML | In preparation |
| **Programming** | |
| Programming options | start/end value analog output; switch/ release points; PNP/NPN; NO/NC contact; hysteresis/window function; damping; pressure unit; peak pressure memory |
| **Mechanical data** | |
| Housing material | Stainless-steel/Plastic, 1.4404 (AISI 316L)/Grilamid TR90 UV/Elastollan C 65 A 15 HPM 000/Ultramid A3X2G5 |
| Process connection | G 1/4" male thread |
| Wrench size pressure connection / coupling nut | 24 |
| Max. tightening torque of housing nut | 35 Nm |
| Electrical connection | Connector, M12 × 1 |
| Protection class | IP66<br>IP67<br>IP69K |
| **Environmental conditions** | |
| Ambient temperature | -40…+80 °C |
| Storage temperature | -40…+80 °C |
| Shock resistance | 50 |
| EMV | EN 61000-4-2 ESD:4 kV CD / 8 kV AD<br>EN 61000-4-3 HF radiated: 15 V/m |

the sensor variant, the processed signal is available either as a switching or an analog output with an accuracy of 0.25 % of full scale. The rotatable sensor body and a variety of process connections guarantee flexible process integration.

PS510-10A-04-LI2UPN8-H1141| 03/25/2026 21-33 | technical changes reserved

## Technical data

| | |
|---|---|
| | EN 61000-4-4 Burst: 2 kV<br>EN 61000-4-6 HF cable bound: 10 V<br>EN 61000-6-2 0.5 kV, 42 Ω<br>EN 61326-2-3 |
| **Tests/approvals** | |
| UL registration number | E183243 |
| **Reference conditions acc. to IEC 61298-1** | |
| Temperature | -40…+85 °C |
| Atmospheric pressure | 689…1300 hPa abs. |
| Humidity | 10…95 % rel. |
| Auxiliary power | 24 VDC |
| **Displays/Operating elements** | |
| Display | 4-digit 12-segment display, rotatable by 180°, red or green |
| Switching state | 2 × LEDs, Yellow |
| Unit display | 5 x LEDs green (bar, psi, kPa, MPa, misc) |
| **Temperature behaviour** | |
| Temperature coefficient range $TK_s$ | ± 0.11 % of full scale/10 K |
| Temperature coefficient zero point $TK_0$ | ± 0.11 % of full scale/10 K |
| MTTF | 98 years acc. to SN 29500 (Ed. 99) 40 °C |
| Included in delivery | FKM 90 O-ring, 1 piece |

## Technical data

| | |
|---|---|
| Type | PS510-10A-04-LI2UPN8-H1141 |
| ID | 100003733 |
| **Pressure range** | |
| Pressure type | Absolute pressure |
| Pressure range | 0…10 bar |
| | 0…145.04 psi |
| | 0…1 MPa |
| Admissible overpressure | ≤ 100 bar |
| Burst pressure | ≥ 500 bar |
| Response time | Typically 1 ms (max. 2.5 ms) |
| Long-term stability | 0.2 % FS, /annum |
| Operating voltage $U_B$ | 18…33 VDC |
| Voltage drop at $I_e$ | ≤ 2 V |
| Short-circuit/reverse polarity protection | yes, cyclic / yes (voltage supply) |
| Protection class | IP66<br>IP67 |

PS510-10A-04-LI2UPN8-H1141| 03/25/2026 21-33 | technical changes reserved

## Technical data

| | |
|---|---|
| | IP69K |
| Insulation class | III |
| **Outputs** | |
| Output 1 | Switching output or IO-Link mode |
| Output 2 | Analog or switching output |
| **Switching output** | |
| Communication protocol | IO-Link |
| Output function | NO/NC, PNP/NPN |
| Rated operational current | 0.25 A |
| Switching frequency | ≤ 300 Hz |
| Switching point distance | ≥ 0.5 % |
| Switch point: | (Min. + 0.005 × range)…100 % of full scale |
| Release point(s) | min. up to (SP - 0.005 × range) |
| Switching cycles | ≥ 100 mil. |
| **Analog output** | |
| Current output | 4…20 mA |
| Voltage output | 0…10 V |
| **IO-Link** | |
| IO-Link specification | V 1.1 |
| Programming | FDT/DTM |
| Transmission physics | corresponds to 3-wire physics (PHY2) |
| Transmission rate | COM 2/38.4 kbps |
| Process data width | 32 bit |
| Measured value information | 24 bit |
| Switchpoint information | 3 bit |
| Frame type | 2.2 |
| Profile support | Smart Sensor Profile (SSP4.1.1) |
| Included in the SIDI GSDML | In preparation |
| **Temperature behaviour** | |
| Medium temperature | -40…+80 °C |
| Temperature coefficient zero point $TK_0$ | ± 0.11 % of full scale/10 K |
| Temperature coefficient range $TK_s$ | ± 0.11 % of full scale/10 K |
| **Environmental conditions** | |
| Ambient temperature | -40…+80 °C |
| Storage temperature | -40…+80 °C |
| Shock resistance | 50 |
| EMV | EN 61000-4-2 ESD:4 kV CD / 8 kV AD<br>EN 61000-4-3 HF radiated: 15 V/m |

PS510-10A-04-LI2UPN8-H1141| 03/25/2026 21-33 | technical changes reserved

## Technical data

| | |
|---|---|
| | EN 61000-4-4 Burst: 2 kV<br>EN 61000-4-6 HF cable bound: 10 V<br>EN 61000-6-2 0.5 kV, 42 Ω<br>EN 61326-2-3 |
| **Mechanical data** | |
| Housing material | Stainless-steel/Plastic, 1.4404 (AISI 316L)/Grilamid TR90 UV/Elastollan C 65 A 15 HPM 000/Ultramid A3X2G5 |
| Process connection | G 1/4" male thread |
| Wrench size pressure connection / coupling nut | 24 |
| Electrical connection | Connector, M12 × 1 |
| Max. tightening torque of housing nut | 35 Nm |
| **Reference conditions acc. to IEC 61298-1** | |
| Temperature | -40…+85 °C |
| Atmospheric pressure | 689…1300 hPa abs. |
| Humidity | 10…95 % rel. |
| Auxiliary power | 24 VDC |
| **Displays/Operating elements** | |
| Display | 4-digit 12-segment display, rotatable by 180°, red or green |
| Switching state | 2 × LEDs, Yellow |
| Unit display | 5 x LEDs green (bar, psi, kPa, MPa, misc) |
| **Programming** | |
| Programming options | start/end value analog output; switch/ release points; PNP/NPN; NO/NC contact; hysteresis/window function; damping; pressure unit; peak pressure memory |
| **Tests/approvals** | |
| Approvals | cULus |
| UL registration number | E183243 |
| MTTF | 98 years acc. to SN 29500 (Ed. 99) 40 °C |
| Included in delivery | FKM 90 O-ring, 1 piece |

PS510-10A-04-LI2UPN8-H1141| 03/25/2026 21-33 | technical changes reserved

IO-Link process data image

| Bit | 0 | 1 | 2 | 3 | 4 | 5 | 6 | 7 | 8 | 9 | 10 | 11 | 12 | 13 | 14 | 15 |
|---|---|---|---|---|---|---|---|---|---|---|---|---|---|---|---|---|
| Byte n | Switching (physical OUT 1) | Switching (physical OUT 2) | Fault state | | | | | | 8-bit scale (pressure) | | | | | | | |
| Bit | 16 | 17 | 18 | 19 | 20 | 21 | 22 | 23 | 24 | 25 | 26 | 27 | 28 | 29 | 30 | 31 |
| Byte n+1 | 16-bit process value | | | | | | | | | | | | | | | |

PS510-10A-04-LI2UPN8-H1141| 03/25/2026 21-33 | technical changes reserved