# PS510-16A-01-LI2UPN8-H1141
# Pressure sensor – Absolute Pressure: 0…16 Bar

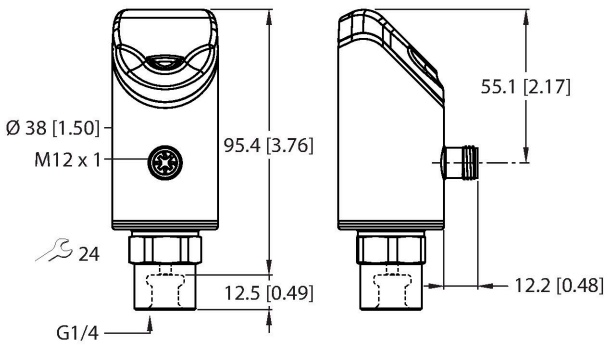




## Technical data

| | |
|---|---|
| Type | PS510-16A-01-LI2UPN8-H1141 |
| ID no. | 100003742 |
| Medium temperature | -40…+90 °C |
| Application area | Liquids and gases |
| **Pressure range** | |
| Pressure type | Absolute pressure |
| Absolute pressure bar | 0…16 bar abs. |
| | 0…232.06 psi abs. |
| | 0…1.6 MPa abs. |
| Burst pressure | ≥ 70 bar |
| Response time | ≤ 3 ms |
| **Electrical data** | |
| Operating voltage | 18…33 VDC |
| Short-circuit/reverse polarity protection | yes, cyclic / yes (voltage supply) |
| Capacitive load | 100 nF |
| Insulation class | III |
| **Outputs** | |
| Output 1 | Switching output or IO-Link mode |
| Output 2 | Analog output (current/voltage) or switching output |
| **Switching output** | |
| Communication protocol | IO-Link |
| Output function | NO/NC, PNP/NPN |
| Accuracy | ± 0.25 % FS BSL |

## Features

- 4-digit, 2-colored, 12-segment display, rotatable by 180°
- Housing is rotatable after plugging the process connection
- Metal measuring cell
- 18…33 VDC
- NO/NC contact, PNP/NPN output, analog output (current/voltage), IO-Link
- Process connection G1/4" female thread
- Plug-in device, M12 × 1

## Wiring diagram

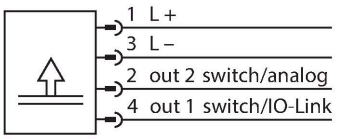


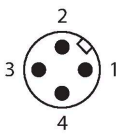


## Functional principle

The pressure sensors from the P510 product series operate with fully welded metal measuring cells. As a result of the pressure acting on the metal substrate, a signal that is proportional to the pressure is generated and processed electronically. The processed signal is available either as a switching or an

PS510-16A-01-LI2UPN8-H1141| 07/22/2021 11-49 | technical changes reserved

## Technical data

| | |
|---|---|
| Rated operational current | 0.25 A |
| Switching frequency | ≤ 300 Hz |
| Switching point distance | ≥ 0.5 % |
| Switch point: | (min. + 0.005 x range) up to 100 % of full scale |
| Release point(s) | min. up to (SP - 0.005 × range) |
| Switching cycles | ≥ 100 mil. |
| **Analog output** | |
| Current output | 4…20 mA |
| High level signal current | 20.5 mA |
| Low level signal current | 3.8 mA |
| Load resistance current output | ≤ 0.5 kΩ |
| Voltage output | 0…10 V |
| Load resistance voltage output | ≥ 8 kΩ |
| Accuracy LHR | ± 0.25 % FS BSL |
| **IO-Link** | |
| IO-Link specification | V 1.1 |
| IO-Link port type | Class A |
| Transmission physics | corresponds to 3-wire physics (PHY2) |
| Frame type | 2.2 |
| Transmission rate | COM 2/38.4 kbps |
| Process data width | 16 bit |
| Measured value information | 14 bit |
| Switchpoint information | 2 bit |
| Programming | FDT/DTM |
| Accuracy | ± 0.25 % FS BSL |
| Included in the SIDI GSDML | Yes |
| **Programming** | |
| Programming options | start/end value analog output; switch/ release points; PNP/NPN; NO/NC contact; hysteresis/window function; damping; pressure unit; peak pressure memory |
| **Mechanical data** | |
| Housing material | Stainless-steel/Plastic, 1.4404 (AISI 316L)/Grilamid TR90 UV |
| Materials (contact with media) | Stainless steel 1.4404 (AISI 316L)/1.4542 (AISI 630) |
| Process connection | G 1/4" female thread |
| Wrench size pressure connection / coupling nut | 24 |

analog output with an accuracy of 0.25% of full scale. The rotatable sensor body and a variety of process connections guarantee flexible process integration.

PS510-16A-01-LI2UPN8-H1141| 07/22/2021 11-49 | technical changes reserved

## Technical data

| | |
|---|---|
| Max. tightening torque of housing nut | 35 Nm |
| Electrical connection | Connector, M12 × 1 |
| Protection class | IP66<br>IP67<br>IP69K |
| **Environmental conditions** | |
| Ambient temperature | -40…+80 °C |
| Storage temperature | -40…+80 °C |
| Shock resistance | 50 |
| EMV | EN 61000-4-2 ESD:4 kV CD / 8 kV AD<br>EN 61000-4-3 HF radiated: 15 V/m<br>EN 61000-4-4 Burst: 2 kV<br>EN 61000-4-6 HF cable bound: 10 V<br>EN 61000-6-2 0.5 kV, 42 Ω<br>EN 61326-2-3 |
| **Tests/approvals** | |
| Approvals | UL |
| UL registration number | E183243 |
| **Reference conditions acc. to IEC 61298-1** | |
| Temperature | 15…+25 °C |
| Atmospheric pressure | 860…1030 hPa abs. |
| Humidity | 45…75 % rel. |
| Auxiliary power | 24 VDC |
| **Display functions** | |
| Display | 4-digit 12-segment display, rotatable by 180°, red or green |
| Switching state | 2 × LEDs, Yellow |
| Unit display | 5 x LEDs green (bar, psi, kPa, MPa, misc) |
| **Temperature behaviour** | |
| Temperature coefficient span $T_{kS}$ | ± 0.1 % of full scale/10 K |
| Temperature coefficient zero point Tk0 | ± 0.1 % of full scale/10 K |
| MTTF | 98 years acc. to SN 29500 (Ed. 99) 40 °C |

PS510-16A-01-LI2UPN8-H1141| 07/22/2021 11-49 | technical changes reserved