PT25R-1004-IX-H1143
Pressure Transmitter – With Current Output (2-Wire)

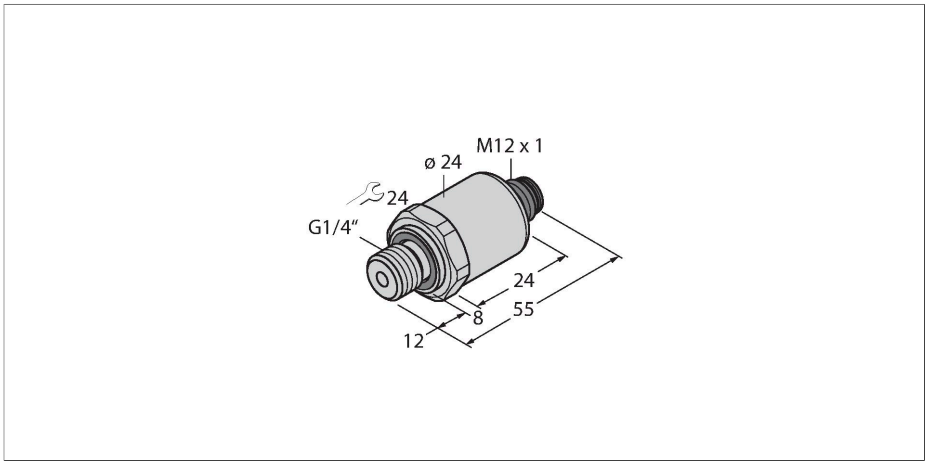

Features

- Ceramic measuring cell
- Compact and robust design
- Excellent EMC properties
- Pressure range 0…25 bar rel.
- 10…30 VDC
- Analog output 4…20 mA
- Process connection G1/4" male thread
- Plug-in device, M12 × 1
- ATEX, IECEx
- Category II 1/2 GD, Ex zone 0

Wiring diagram

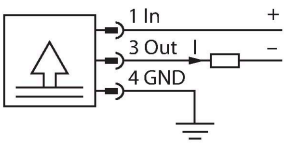

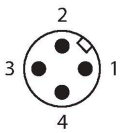

Technical data

Type	PT25R-1004-IX-H1143
Ident. no.	100003765
Pressure range	
Relative pressure	0…25 bar rel.
	0…363 psi
	0…2.5 MPa
Admissible overpressure	≤ 75 bar
Burst pressure	≥ 75 bar
Response time	< 2 ms, typ. 1 ms
Long-term stability	0.25 % FS, according to IEC EN 60770-1
Power supply	
Operating voltage	10…30 VDC
Current consumption	≤ 23 mA
Short-circuit/reverse polarity protection	yes / yes
Protection type and class	IP67 / III
Insulation voltage	750 VDC
Outputs	
Output 1	Analog output
Output function	Analog output current
Analog output	
Current output	4…20 mA
Load	≤ (Supply voltage -10)/20 kΩ
Resolution	<± 0.1 % FS

Functional principle

The pressure sensors of the PT …-1000 series operate with a ceramic measuring cell. Depending on the sensor variant, the processed signal is available as an analog output signal via 4…20 mA (2-wire). 0… 10 V, 0…5 V and 1…6 V (3-wire) or as an IO-Link process parameter. The IO-Link sensor versions also have two independently configurable switching outputs.

PT25R-1004-IX-H1143| 09/24/2020 04-03 | technical changes reserved

Technical data

Accuracy LHR	± 0.3 % FS BSL
Temperature behaviour	
Medium temperature	-30…+120 °C
Temperature coefficient	± 0.2 % of full scale/10 K
Ambient conditions	
Ambient temperature	-35…+85 °C
Storage temperature	-50…+100 °C
Vibration resistance	20 g, 15…2000 Hz, 15…25 Hz with amplitude +/- 15 mm, 1 octave/minute all 3 directions, 50 continuous loads, acc. to IEC 68-2-6
Shock resistance	100 g, 11 ms, half sinusoidal curve, all 6 directions, free fall from 1 m onto concrete (6x) , acc. to IEC 68-2-27
Housing	
Housing material	Stainless-steel/Plastic, 1.4404 (AISI 316L)/polyacrylamide 50 % GF UL 94 V-0
Pressure connection material	Stainless steel 1.4404 (AISI 316L)
Pressure transducer material	Ceramics Al_2O_3
Sealing material	FPM spez.
Process connection	G 1/4" male thread
Wrench size pressure connection / coupling nut	24
Electrical connection	Connector, M12 × 1
Max. tightening torque housing nut	20 Nm
Reference conditions acc. to IEC 61298-1	
Temperature	15…+25 °C
Atmospheric pressure	860…1060 hPa abs.
Humidity	45…75 % rel.
Auxiliary power	24 VDC
Important note	For intrinsically safe applications, the values specified in the correspond-ing Ex certificates (ATEX, IECEX, UL etc.) apply.
Ex approval acc. to conformity certificate	SEV 10 ATEX 0145
Application area	II 1/2 GD
Ignition protection category	Gas Ex ia IIC; dust Ex ia IIIC
Approvals	UL E302799
MTTF	1189 years acc. to SN 29500 (Ed. 99) 40 °C

PT25R-1004-IX-H1143| 09/24/2020 04-03 | technical changes reserved

Operating Instructions

Intended use

This device fulfills Directive 2014/34/EU and is suited for use in areas exposed to explosion hazards according to EN 60079-0:2012 + A11:2013, EN 60079-11:2012 and EN 60079-26:2015.In order to ensure correct operation according to the intended purpose, the national regulations and directives must be observed.

For use in explosion hazardous areas conform to classification

The sensors may be used only in dust or gas areas

Marking (see device or technical data sheet)

II 1/2 GD Ex ia IIC T4 Ga/Gb and Ex ia IIIC T125°C Da/Db acc. to EN60079-0:12+A11:2013

Installation/Commissioning

These devices may only be installed, connected and operated by trained and qualified staff. Qualified staff must have knowledge of protection classes, directives and regulations concerning electrical equipment designed for use in explosion hazardous areas.Please verify that the classification and the marking on the device comply with the actual application conditions.

This device is only suited for connection to approved Exi circuits according to EN 60079-0 and EN 60079-11. Please observe the maximum admissible electrical values.After connection to other circuits the sensor may no longer be used in Exi installations. When interconnected to (associated) electrical equipment, it is required to perform the "Proof of intrinsic safety" (EN60079-14).

Installation and mounting instructions

Avoid static charging of cables and plastic devices. Please only clean the device with a damp cloth. Do not install the device in a dust flow and avoid build-up of dust deposits on the device.If the devices and the cable could be subject to mechanical damage, they must be protected accordingly. They must also be shielded against strong electro-magnetic fields.The pin configuration and the electrical specifications can be taken from the device marking or the technical data sheet.In order to avoid contamination of the device, please remove possible blanking plugs of the cable glands or connectors only shortly before inserting the cable or opening the cable socket.

Special conditions for safe operation

The device must be protected against any kind of mechanical damage.

Service/Maintenance

Repairs are not possible. The approval expires if the device is repaired or modified by a person other than the manufacturer. The most important data from the approval are listed.

PT25R-1004-IX-H1143| 09/24/2020 04-03 | technical changes reserved