TTMS-206A-G1/2-LI6-H1140-L250-50/150
Temperature Detection – With Current Output

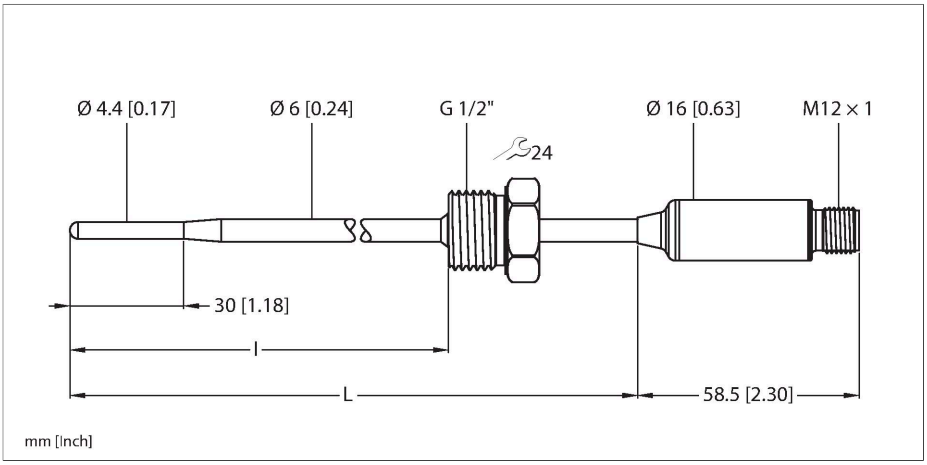



Technical data

Type	TTMS-206A-G1/2-LI6-H1140-L250-50/150
ID	100004225
Temperature range	
Measuring range	-50…150 °C
	-58…302 °F
Factory setting	-50…150 °C
	-58…302 °F
Measuring element	Pt1000, DIN EN 60751, class A
Process Pressure	100 bar
Power supply	
Operating voltage U_B	5…32 VDC
Current consumption	≤ 20 mA
Short-circuit/reverse polarity protection	yes / yes
Insulation class	III
Outputs	
Output 1	Analog output
Output function	Analog output
Analog output	
Current output	4…20 mA
Load	≤ 0.86 kΩ at 24 VDC [R_{Load}=(V_{supply} – 5 V)/22 mA]
Accuracy (Lin. + Hys. + Rep.)	± 0.2 K
Mechanical data	
Housing material	Stainless steel, 1.4404 (AISI 316L)

Features

- Miniature design
- Analog output 4…20 mA
- Factory setting -50 °C…150 °C
- Process connection G1/2", male thread
- Bendable probe (min. bending radius: 3x outer diameter; excluding 30-mm probe tip)
- Probe tapered from 6 mm to 4.4 mm

Wiring diagram

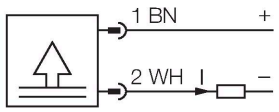

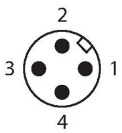

Functional principle

Temperatures are recorded over a mineral insulated transmitter and converted into a wide range of electrical output signals.
The devices of the TTM miniature series are enclosed in a fully potted plastic housing and depending on the variant, they have either an IO-link output, power output and/or switching output.

TTMS-206A-G1/2-LI6-H1140-L250-50/150 02/21/2025 18-18 | technical changes reserved

Technical data

Process connection	G 1/2" male thread
Electrical connection	Connector, M12 × 1
Protection class	IP67
Environmental conditions	
Ambient temperature	-40…+80 °C
Storage temperature	-40…+80 °C
Tests/approvals	
Reference conditions acc. to IEC 61298-1	
Temperature	15…+25 °C
Atmospheric pressure	860…1060 hPa abs.
Humidity	45…75 % rel.
Auxiliary power	24 VDC
Temperature behaviour	
Temperature coefficient range TK_s	± 0.1 % of full scale/10 K
Temperature coefficient zero point TK_0	± 0.1 % of full scale/10 K
MTTF	162 years acc. to SN 29500 (Ed. 99) 40 °C

Technical data

Type	TTMS-206A-G1/2-LI6-H1140-L250-50/150
ID	100004225
Temperature range	
Measuring range	-50…150 °C
	-58…302 °F
Factory setting	-50…150 °C
	-58…302 °F
Note	Probe tapered from 6 mm to 4.4 mm
Measuring element	Pt1000, DIN EN 60751, class A
Bar length (L)	300 mm
Immersion length (I)	250 mm
Outer diameter	4.4 mm
Power supply	
Operating voltage U_B	5…32 VDC
Current consumption	≤ 20 mA
Short-circuit/reverse polarity protection	yes / yes
Protection class	IP67
Insulation class	III

TTMS-206A-G1/2-LI6-H1140-L250-50/150 02/21/2025 18-18 | technical changes reserved

Technical data

Outputs	
Output 1	Analog output
Output function	Analog output
Analog output	
Current output	4…20 mA
Load	≤ 0.86 kΩ at 24 VDC [R_{Load}=(V_{supply} – 5 V)/22 mA]
Accuracy (Lin. + Hys. + Rep.)	± 0.2 K
Temperature behaviour	
Temperature coefficient zero point TK_0	± 0.1 % of full scale/10 K
Temperature coefficient range TK_s	± 0.1 % of full scale/10 K
Environmental conditions	
Ambient temperature	-40…+80 °C
Storage temperature	-40…+80 °C
Mechanical data	
Housing material	Stainless steel, 1.4404 (AISI 316L)
Sensor material	Stainless steel, 1.4404 (AISI 316L)
Process connection	G 1/2" male thread
Process Pressure	100 bar
Electrical connection	Connector, M12 × 1
Reference conditions acc. to IEC 61298-1	
Temperature	15…+25 °C
Atmospheric pressure	860…1060 hPa abs.
Humidity	45…75 % rel.
Auxiliary power	24 VDC
Tests/approvals	
MTTF	162 years acc. to SN 29500 (Ed. 99) 40 °C

TTMS-206A-G1/2-LI6-H1140-L250-50/15Q 02/21/2025 18-18 | technical changes reserved