PT0.1R-1504-I2-H1143/D840
Pressure Transmitter – With Current Output (2-Wire)

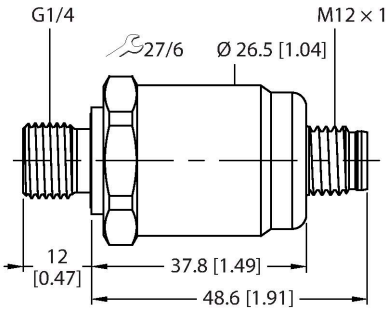

Features

- Ceramic measuring cell
- Extremely high measuring accuracy
- Compact and robust design
- Excellent temperature behavior
- Pressure range 0…100 mbar rel.
- 10…30 VDC
- Analog output 4…20 mA
- Process connection G1/4" male thread, back sealing DIN 3852-E
- Plug-in device, M12 × 1

Technical data

Type	PT0.1R-1504-I2-H1143/D840
Ident. no.	100004281
Pressure range	
Relative pressure	0…0.1 bar rel.
	0…1.45 psi
	0…0.01 MPa
Admissible overpressure	≤ 2 bar
Permissible vacuum	- 0.3 bar
Burst pressure	≥ 2 bar
Response time	< 150 ms
Adjustment position	Vertical, pressure connection at bottom
Vertical position error, pressure connection at top	+ 0.2 mbar
Horizontal position error	+ 0.1 mbar
Long-term stability	0.25 % FS, , acc. to EN 60770-1
Power supply	
Operating voltage	10…30 VDC
Current consumption	≤ 23 mA
Short-circuit/reverse polarity protection	yes / yes
Protection type and class	IP67 / III
Insulation voltage	500 VDC
Outputs	
Output 1	Analog output

Wiring diagram

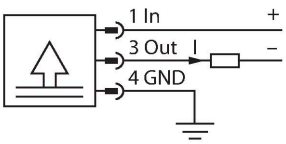

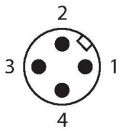

Functional principle

The pressure sensors of the PT …-1500 series operate with a ceramic measuring cell. Depending on the sensor type used, the processed signal is provided as analog output of either 4…20 mA (2-wire) or 0…10 V/0…5 V (3-wire).

PT0.1R-1504-I2-H1143/D840| 09/24/2020 04-07 | technical changes reserved

Technical data

Analog output	
Current output	4…20 mA
Load	≤ (Supply voltage -10)/20 kΩ
Resolution	<± 0.1 % FS
Accuracy LHR	± 0.35 % FS BSL
Temperature behaviour	
Medium temperature	-25…+85 °C
Temperature coefficient span TkS	± 0.07 % FS/10 K
Ambient conditions	
Ambient temperature	-25…+85 °C
Storage temperature	-40…+85 °C
Vibration resistance	20 g, 15…2000 Hz, 15…25 Hz with amplitude µ 15 mm, 1 octave/minute in all 3 directions, 50 continuous loads, according to IEC 68-2-6
Shock resistance	50 g, 6 ms, half sinusoidal curve, all 6 directions, free fall from 1 m onto concrete (6x) , acc. to IEC 68-2-27
Housing	
Housing material	Stainless-steel/Plastic, 1.4404 (AISI 316L)/polyacrylamide 50 % GF UL 94 V-0
Pressure connection material	Stainless steel 1.4404 (AISI 316L)
Pressure transducer material	Ceramics Al_2O_3
Sealing material	FPM
Process connection	G 1/4" male thread DIN 3852-E (rear sealing)
Wrench size pressure connection / coupling nut	27
Electrical connection	Connector, M12 × 1
Max. tightening torque housing nut	27 Nm
Reference conditions acc. to IEC 61298-1	
Temperature	15…+25 °C
Atmospheric pressure	800…1060 hPa abs.
Humidity	45 % rel.
Auxiliary power	24 VDC
MTTF	965 years acc. to SN 29500 (Ed. 99) 40 °C

PT0.1R-1504-I2-H1143/D840| 09/24/2020 04-07 | technical changes reserved