TS700-L050-16-2UPN8-H1141
Temperature Detection – With 2 PNP/NPN Transistor Switching Outputs

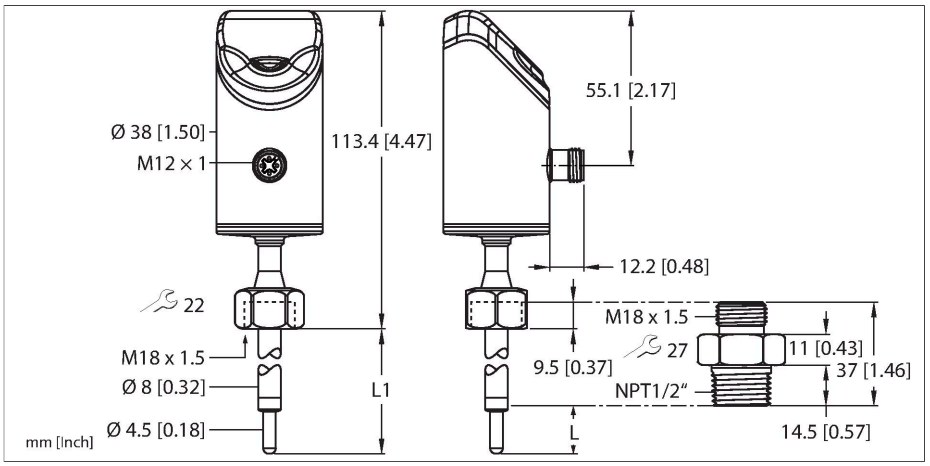



Technical data

Type	TS700-L050-16-2UPN8-H1141
ID	100004379
Temperature range	
Measuring range	-50…150 °C
	-58…302 °F
Accuracy	0.15 °C + 0.002 • |t| (-30…300 °C)
Measuring element	Pt1000, DIN EN 60751, class A
Response time	t0.5 = 3.5 s/t0.9 = 9.5 s in water at 0.2 m/s
Immersion depth (L)	50 mm
Process Pressure	300 bar
Operating voltage U_B	10…33 VDC
Protective measure	SELV, PELV according to DIN EN 61140
Short-circuit/reverse polarity protection	yes / yes
Power consumption	≤ 3 W
Insulation class	III
Outputs	
Output 1	Switching output or IO-Link mode
Output 2	Switching output
Switching output	
Communication protocol	IO-Link
Output function	NO/NC programmable, PNP/NPN
Switching point accuracy	± 0.2 K

Features

- Screw-in adapter with process connection NPT1/2" male thread included in delivery
- 4-digit, 2-colored, 12-segment display, rotatable by 180°
- Upper part of housing can be rotated up to 340°
- Materials in contact with media: 1.4404 (316L), CR O-ring
- Immersion length: 50 mm
- 10…33 VDC
- NO/NC contact, PNP/NPN output, IO-Link
- Various IO-Link mapping profiles can be selected

Wiring diagram

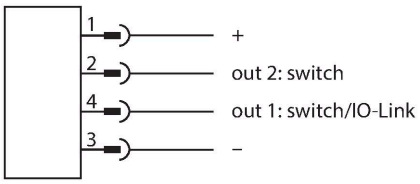

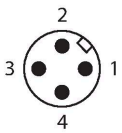

Functional principle

TS700-L050-16-2UPN8-H1141| 02/21/2025 18-19 | technical changes reserved

Technical data

The TS+ product series is a compact processing unit with a 4-digit, 12-segment display that can be freely rotated by 340°. Compact units with (TS700) and without (TS720) temperature sensors as well as different output variants are available.

Rated operational current	0.25 A
Release position	-50…+149.8 °C
Switching point	-49.8…+150 °C
Switching point distance	≥ 0.2 K
Switching cycles	≥ 100 mil.
Repeatability	0.1 K
IO-Link	
IO-Link specification	V 1.1
Transmission physics	corresponds to 3-wire physics (PHY2)
Transmission rate	COM 2 (38.4 kBaud)
Frame type	2.2
Programming	FDT/DTM/selection of various mapping profiles
Genauigkeit	± 0.1 K
Included in the SIDI GSDML	Yes
Programming	
Programming options	Switching logic (PNP, NPN, Auto*), switching/release point; hysteresis/ window mode; NO/NC; unit; IO-Link mapping profile; factory settings
Mechanical data	
Housing material	Stainless-steel/Plastic, 1.4404 (AISI 316L)/Grilamid TR90 UV/Elastollan C 65 A 15 HPM 000/Ultramid A3X2G5
Process connection	1/2" NPT male thread
Electrical connection	Connector, M12 × 1
Protection class	IP66 IP67 IP69K, According to ISO 20653
Environmental conditions	
Ambient temperature	-40…+80 °C
Storage temperature	-40…+80 °C
Shock resistance	50 g (11 ms) EN 60068-2-27
Vibration resistance	20 g (10…3000 Hz), DIN EN 60068-2-6
Tests/approvals	
UL registration number	E516036
Reference conditions acc. to IEC 61298-1	
Temperature	15…+25 °C
Atmospheric pressure	860…1060 hPa abs.
Humidity	10…95 % rel.

TS700-L050-16-2UPN8-H1141| 02/21/2025 18-19 | technical changes reserved

Technical data

Auxiliary power	24 VDC
Displays/Operating elements	
Display	4-digit 12-segment display, rotatable by 180°, red or green
Switching state	2 × LEDs, Yellow
Unit display	4 x green LED (°C, °F, K, Ohm)
Included in delivery	Screw-in adaptor with process connection 1/2" NPT male thread

Technical data

Type	TS700-L050-16-2UPN8-H1141
ID	100004379
Temperature range	
Measuring range	-50…150 °C
	-58…302 °F
Accuracy	0.15 °C + 0.002 • |t| (-30…300 °C)
Measuring element	Pt1000, DIN EN 60751, class A
Response time	t0.5 = 3.5 s/t0.9 = 9.5 s in water at 0.2 m/s
Immersion depth L	50 mm
Outer diameter	3 mm
Operating voltage U_B	10…33 VDC
Power consumption	≤ 3 W
Voltage drop at I_e	≤ 2 V
Protective measure	SELV, PELV according to DIN EN 61140
Short-circuit/reverse polarity protection	yes / yes
Protection class	IP66 IP67 IP69K, According to ISO 20653
Insulation class	III
Outputs	
Output 1	Switching output or IO-Link mode
Output 2	Switching output
Switching output	
Communication protocol	IO-Link
Output function	NO/NC programmable, PNP/NPN
Switching point accuracy	± 0.2 K
Rated operational current	0.25 A
Switching current	≤ 250 mA
Switching point distance	≥ 0.2 K

TS700-L050-16-2UPN8-H1141| 02/21/2025 18-19 | technical changes reserved

Technical data

Switching cycles	≥ 100 mil.
Release position	-50…+149.8 °C
Switching point	-49.8…+150 °C
Repeatability	0.1 K
IO-Link	
IO-Link specification	V 1.1
Programming	FDT/DTM/selection of various mapping profiles
Transmission physics	corresponds to 3-wire physics (PHY2)
Transmission rate	COM 2 (38.4 kBaud)
Frame type	2.2
Genauigkeit	± 0.1 K
Included in the SIDI GSDML	Yes
Environmental conditions	
Ambient temperature	-40…+80 °C
Storage temperature	-40…+80 °C
Vibration resistance	20 g (10…3000 Hz), DIN EN 60068-2-6
Shock resistance	50 g (11 ms) EN 60068-2-27
Mechanical data	
Housing material	Stainless-steel/Plastic, 1.4404 (AISI 316L)/Grilamid TR90 UV/Elastollan C 65 A 15 HPM 000/Ultramid A3X2G5
Process connection	1/2" NPT male thread
Process Pressure	300 bar
Electrical connection	Connector, M12 × 1
Reference conditions acc. to IEC 61298-1	
Temperature	15…+25 °C
Atmospheric pressure	860…1060 hPa abs.
Humidity	10…95 % rel.
Auxiliary power	24 VDC
Displays/Operating elements	
Display	4-digit 12-segment display, rotatable by 180°, red or green
Switching state	2 × LEDs, Yellow
Unit display	4 x green LED (°C, °F, K, Ohm)
Programming	
Programming options	Switching logic (PNP, NPN, Auto*), switching/release point; hysteresis/ window mode; NO/NC; unit; IO-Link mapping profile; factory settings

TS700-L050-16-2UPN8-H1141| 02/21/2025 18-19 | technical changes reserved

Technical data

Tests/approvals	
Approvals	cULus
UL registration number	E516036
Included in delivery	Screw-in adaptor with process connection 1/2" NPT male thread

TS700-L050-16-2UPN8-H1141| 02/21/2025 18-19 | technical changes reserved

Status LEDs

LED	Color	Status	Description
PWR	Green	On	Operating voltage applied Device is operational
		Flashing	Operating voltage applied IO-Link communication active (inverted flash with T on 900 ms and T off 100 ms)
FLT	Red	On	Error displayed (For error pattern in combination with LEDs see manual)
		Off	No errors displayed
°C	Green	On	Temperature in °C
°F	Green	On	Temperature in °F
K	Green	On	Temperature in K
Ω	Green	On	Resistance in Ω
LOC	Yellow	On	Device locked
		Flashing	"Lock/unlock" process is active
		Off	Device unlocked
I and II (switching point of LEDs)	Yellow	On	Switching output -NO: switching point exceeded/within window (active output) -NC: switching point undershot/outside window (active output)
		Off	Switching output -NO: switching point undershot/outside window (inactive output) -NC: switching point exceeded/within window (inactive output)

For detailed description of the display patterns and flashing codes, see manual

IO-Link process data image

Bit	15	14	13	12	11	10	9	8	7	6	5	4	3	2	1	0
Byte n	14 Bit Process Value (TEMP)														State Out 2	State Out 1

TS700-L050-16-2UPN8-H1141| 02/21/2025 18-19 | technical changes reserved