TW860-960-Q31-M-HT-B1090
UHF Tag

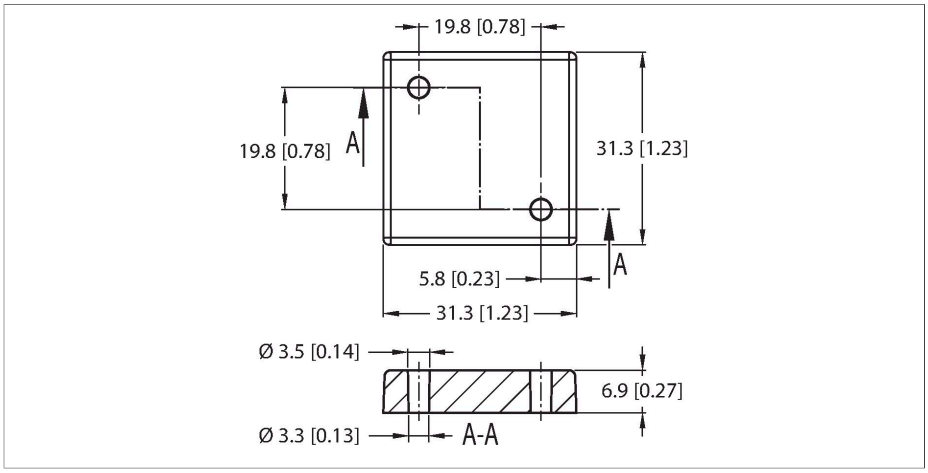

Technical data

Type	TW860-960-Q31-M-HT-B1090
ID	100004394
Remark to product	For direct mounting on metal
Data transfer	Alternating electromagnetic field
Technology	UHF RFID
Region (UHF)	Global (860…960 MHz) ETSI (865…868 MHz) FCC (902…928 MHz)
Reading range on metal	2 m (2W ERP)
Memory type	EEPROM
Chip	Impinj Monza X-8K Dura
Memory	1090 Byte
Memory	Read/Write
Freely usable memory	1024 Byte
EPC memory	16 byte
Number of read operations	unlimited
Number of write operations	10^5
Typical read time	2 ms/Byte
Typical write time	3 ms/Byte
Radio communication and protocol standards	ISO 18000-63 EPCglobal Gen 2
Temperature during read/write access	-40…+85 °C
Temperature outside detection range	-40…+90 °C
Design	Hard tag
Housing length	31 mm

Features

- Max. range 2m (on metal, 2 W ERP, theoretical reading range under laboratory conditions)
- EEPROM, memory 1090 byte
- TID serial number: 6 byte
- For direct mounting on metal

Functional principle

The UHF read/write heads form an air interface the size of which may vary, depending on the combination of read/write head and tag.
The read/write distances mentioned here only represent standard values measured under laboratory conditions and free from any influences caused by materials.
Attainable distances may vary due to component tolerances, mounting conditions, ambient conditions and material qualities, especially when mounted in metal.
Testing of the application under real operating conditions is therefore essential, especially with read/write on-the-fly!

TW860-960-Q31-M-HT-B1090| 11/08/2023 22-35 | technical changes reserved

Technical data

Housing width	31 mm
Housing height	6.9 mm
Housing material	Plastic, PPS
Active area material	Plastic, PPS, black
Protection class	IP68
Packaging unit	1

TW860-960-Q31-M-HT-B1090| 11/08/2023 22-35 | technical changes reserved