REI-05I6T-2H2500-H1181
Incremental Encoder
Industrial Line

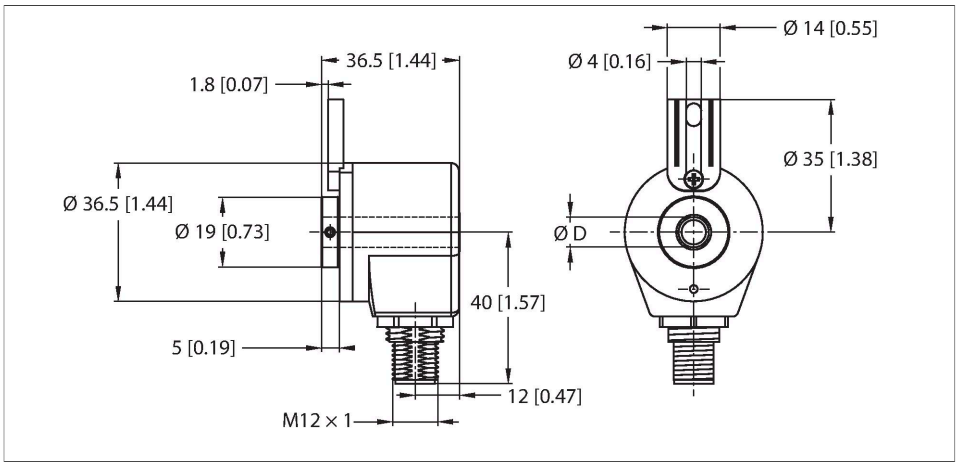

Technical data

Type	REI-05I6T-2H2500-H1181
Ident. no.	100011175
Measuring principle	Optical
Max. Rotational Speed	6000 rpm
Moment of inertia of the rotor	0.2 x10^{-6} kgm^2
Starting torque	< 0.05 Nm
Ambient temperature	-20…+85 °C
Operating voltage	8…30 VDC
No-load current	≤ 40 mA
Output current	≤ 50 mA
Short-circuit protection	yes
Output type	Incremental
Resolution, incremental	2500 ppr
Pulse frequency max.	200 kHz
Signal level high	min. U_B - 3 V
Signal level low	max. 0.5 V
Output function	Push-Pull/HTL, with inverted signals
Design	Hollow shaft
Flange type	Flange with mounting element
Flange diameter	Ø 36.5 mm
Shaft Type	Hollow shaft
Shaft diameter D [mm]	6
	Hollow shaft

Features

- Flange with mounting element, Ø 36.5 mm
- Hollow shaft, Ø 6 mm
- Optical measuring principle
- Shaft material: Brass
- Protection class shaft IP50
- Protection class housing IP65
- -20…+85 °C
- Max. 6000 rpm
- 8…30 VDC
- Push-pull/HTL invertible
- Pulse frequency max. 200 kHz
- M12 × 1 male connector, 8-pin
- 2500 pulses per revolution

Wiring diagram

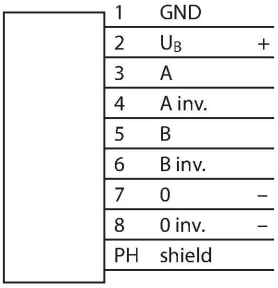

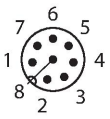

REI-05I6T-2H2500-H1181| 09/09/2020 17-20 | technical changes reserved

Technical data

Shaft material	brass
Housing material	Aluminium chromated
Electrical connection	Connector, M12 × 1
	8-pin
Axial shaft load	20 N
Radial shaft load	40 N
Vibration resistance (EN 60068-2-6)	100 m/s², 55…2000 Hz
Shock resistance (EN 60068-2-27)	1000 m/s², 6 ms
Protection class	IP65
Protection class shaft	IP50

Accessories

RME-3 1544614

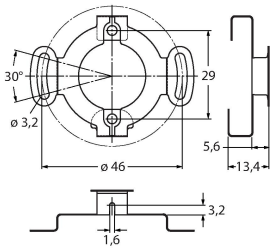

Stainless steel stator coupling for hollow shaft encoders, reference diameter 46 mm, for highly dynamic applications with axial and radial play

RME-13 1544624

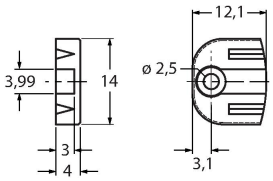

Plastic mounting element for hollow shaft encoders, pitch diameter 42 mm, for applications with limited axial play, low dynamics and limited mounting space

RME-14 1544625

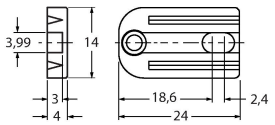

Plastic mounting element for hollow shaft encoders, pitch diameters 44 mm, 60 mm, 63 mm, 65 mm, for low dynamic applications with high axial play.

Wiring accessories

Dimension drawing	Type	Ident. no.	
	RKC8T-2/TXL	6625142	Connection cable, female M12, straight, 8-pin, cable length: 2 m, sheath material: PUR, black; cULus approval; other cable lengths and qualities available, see www.turck.com



REI-05I6T-2H2500-H1181| 09/09/2020 17-20 | technical changes reserved