REM-103S10S-5C13S12M-H1181
Absolute Rotary Encoder - Multiturn
Industrial Line

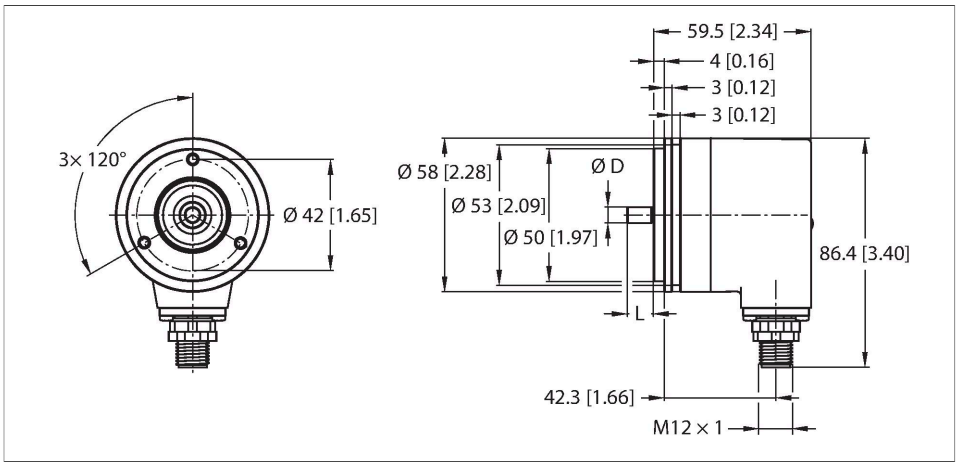

Technical data

Type	REM-103S10S-5C13S12M-H1181
Ident. no.	100011388
Measuring principle	Optical
Max. Rotational Speed	8000 rpm
Moment of inertia of the rotor	3 x10^{-6} kgm^2
Starting torque	< 0.05 Nm
Absolute accuracy (at 25 °C)	± 0.015 °
Ambient temperature	-40…+85 °C
Operating voltage	10…30 VDC
No-load current	≤ 30 mA
Short-circuit protection	yes
Wire breakage/Reverse polarity protection	yes
Output type	Absolute multiturn
Resolution singleturn	13 Bit
Resolution multiturn	12 Bit
Communication protocol	SSi
Output function	Binary coded
Design	Solid shaft
Flange type	Synchro flange
Flange diameter	Ø 58 mm
Shaft Type	Solid shaft
Shaft diameter D [mm]	10
Wavelength L [mm]	20

Features

- Ø 58 mm clamping flange
- Solid shaft, Ø 10mm x 20mm
- Optical measuring principle
- Shaft material, stainless steel
- Protection class IP67 on housing and shaft side
- -40…+85 °C
- Max. 8000 rpm (continuous operation 5000 rpm)
- 10-30 VDC
- SSI Binary
- Male connector, M12 x 1, 8-pole
- Singleturn, 13-bit resolution
- Multiturn, 12-bit resolution

Wiring diagram

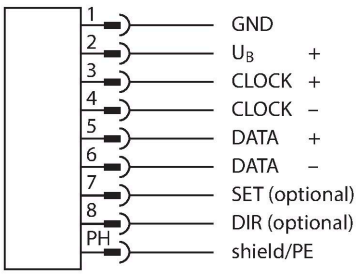

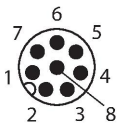

REM-103S10S-5C13S12M-H1181| 09/09/2020 18-01 | technical changes reserved

Technical data

Shaft material	Stainless steel
Housing material	Die-cast zinc
Electrical connection	Connector, M12 × 1
	M12, 8-pole
Axial shaft load	40 N
Radial shaft load	80 N
Vibration resistance (EN 60068-2-6)	100 m/s², 10…2000 Hz
Shock resistance (EN 60068-2-27)	2500 m/s², 6 ms
Protection class	IP67
Protection class shaft	IP67

Pin configuration

Wiring accessories

Dimension drawing	Type	Ident. no.	
	E-RKC 8T-264-2	U-04781	Connection cable, female M12, straight, 8-pin (twisted pairs),shielded, cable length: 2 m, sheath material: PVC, black; cULus approval; other cable lengths and qualities available, see www.turck.com



REM-103S10S-5C13S12M-H1181| 09/09/2020 18-01 | technical changes reserved