REM-E-118T10S-3C13S12M-H1181
Absolute Rotary Encoder - Multiturn
Efficiency Line

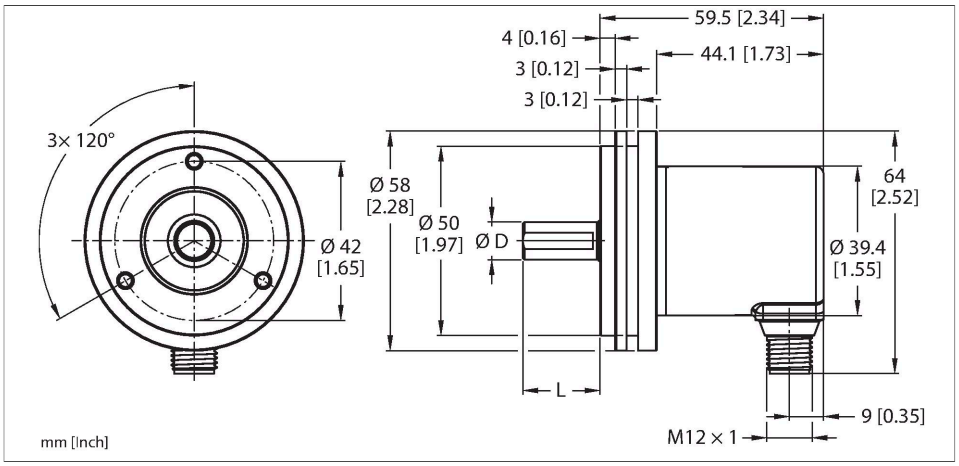

Features

- Ø 58 mm servo flange
- Solid shaft, Ø 10mm x 20mm
- Optical measuring principle
- Shaft material, stainless steel
- Protection class IP64 on housing and shaft side
- -20…+70 °C
- Max. 4000 rpm (continuous operation 2000 rpm)
- Energy harvesting technology
- 10-30 VDC
- SSI (Binary Code)
- M12 connection, 8-pin
- Singleturn, 13-bit resolution
- Multiturn, 16-bit resolution

Technical data

Type	REM-E-118T10S-3C13S12M-H1181
Ident. no.	100011506
Measuring principle	Magnetic
Max. Rotational Speed	4000 rpm
Absolute accuracy (at 25 °C)	± 1 °
Ambient temperature	-20…+70 °C
Operating voltage	10…30 VDC
No-load current	≤ 40 mA
Output current	≤ 30 mA
Short-circuit protection	yes
Wire breakage/Reverse polarity protection	yes
Output type	Absolute multiturn
Resolution singleturn	13 Bit
Resolution multiturn	12 Bit
Signal level high	typ. 3.8 V
Signal level low	typ. 1.3 V
Communication protocol	SSi
Output function	Gray coded
Design	Solid shaft
Flange type	Synchro flange
Flange diameter	Ø 58 mm
Shaft Type	Solid shaft
Shaft diameter D [mm]	10

Wiring diagram

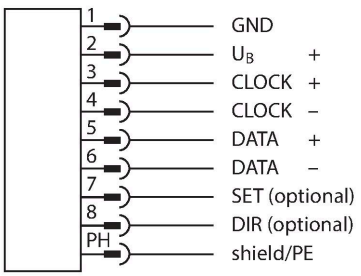

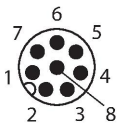

REM-E-118T10S-3C13S12M-H1181| 09/09/2020 18-00 | technical changes reserved

Technical data

Wavelength L [mm]	20
Shaft material	Stainless Steel
Housing material	Die-cast zinc
Electrical connection	Connector, M12 × 1
	M12, 8-pole
Axial shaft load	40 N
Radial shaft load	80 N
Vibration resistance (EN 60068-2-6)	30 g (300 m/s²), 10…2000 Hz
Shock resistance (EN 60068-2-27)	500 g (2500 m/s²), 4 ms
Protection class	IP64
Protection class shaft	IP64

Wiring accessories

Dimension drawing	Type	Ident. no.	
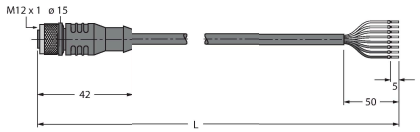	E-RKC 8T-264-2	U-04781	Connection cable, female M12, straight, 8-pin (twisted pairs),shielded, cable length: 2 m, sheath material: PVC, black; cULus approval; other cable lengths and qualities available, see www.turck.com

REM-E-118T10S-3C13S12M-H1181| 09/09/2020 18-00 | technical changes reserved