# REI-E-113T8S-2B1024-H1181
# Incremental Encoder
# Efficiency Line

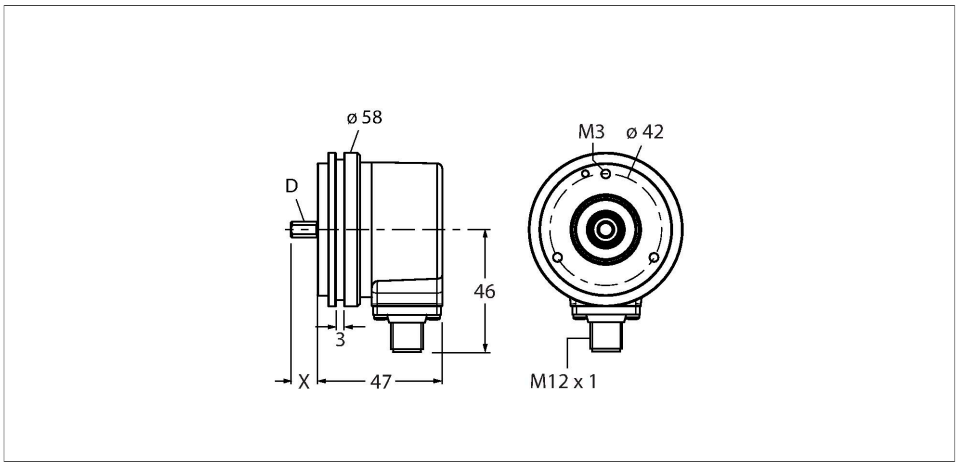


## Technical data

| | |
|---|---|
| Type | REI-E-113T8S-2B1024-H1181 |
| ID | 100011549 |
| Measuring principle | Optical |
| **General data** | |
| Max. Rotational Speed | 4500 rpm |
| Moment of inertia of the rotor | 1.8 × $10^{-6}$ kgm² |
| Starting torque | < 0.05 Nm |
| Output type | Incremental |
| Resolution, incremental | 1024 ppr |
| **Electrical data** | |
| Operating voltage | 10…30 VDC |
| No-load current | 100 mA |
| Output current | ≤ 30 mA |
| Short-circuit protection | yes |
| Wire breakage/Reverse polarity protection | yes |
| Pulse frequency max. | 300 kHz |
| Signal level high | min. $U_B$ - 1 V |
| Signal level low | max. 0.5 V |
| Output function | Push-Pull/HTL, with inverted signals |
| **Mechanical data** | |
| Design | Solid shaft |
| Flange type | Synchro flange |
| Flange diameter | Ø 58 mm |

## Features

- Synchro flange, Ø 58 mm
- Solid shaft, Ø 8 mm × 15 mm
- Optical measuring principle
- Shaft material: stainless steel
- Protection class IP64 on housing and shaft side
- -20…+70 °C
- Max. 4500 rpm (continuous operation 3000 rpm)
- 10…30 VDC
- Male connector, M12 x 1 , 8-pole
- Push-pull, with inverted signals
- Pulse frequency max. 300 kHz
- 1024 pulses per revolution

## Wiring diagram

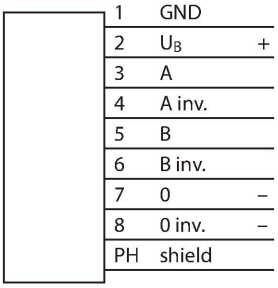


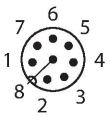


REI-E-113T8S-2B1024-H1181| 06/05/2023 05-19 | technical changes reserved

## Technical data

| | |
|---|---|
| Shaft Type | Solid shaft |
| Shaft diameter D [mm] | 8 |
| Shaft Length L [mm] | 15 |
| Shaft material | Stainless steel |
| Housing material | Die-cast zinc |
| Electrical connection | Connector, M12 × 1 |
| | 8-pin |
| Axial shaft load | 40 N |
| Radial shaft load | 80 N |
| **Environmental conditions** | |
| Ambient temperature | -20…+70 °C |
| Vibration resistance (EN 60068-2-6) | 10 g (100 m/s²), 10…2000 Hz |
| Shock resistance (EN 60068-2-27) | 1000 m/s², 6 ms |
| Protection class | IP64 |
| Protection class shaft | IP64 |

## Accessories

| | |
|---|---|
| RCS-15-08-06 | 1545361 |

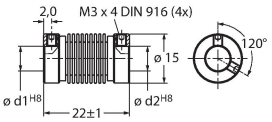


Bellows coupling, outer diameter: 15 mm, bore diameter: 8 mm/6 mm

| | |
|---|---|
| RCS-19-10-08 | 1545357 |

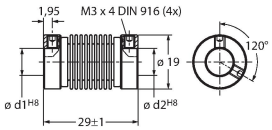


Bellows coupling, outer diameter: 19 mm, bore diameter: 10 mm/8 mm

## Wiring accessories

| Dimension drawing | Type | ID | |
|---|---|---|---|
| | RKC8T-2/TXL | 6625142 | Connection cable, female M12, straight, 8-pin, cable length: 2 m, sheath material: PUR, black; cULus approval; other cable lengths and qualities available, see www.turck.com |




| | | | |
|---|---|---|---|
| | WKC8T-2/TXL | 6625145 | Connection cable, M12 female connector, angled, 8-pin, cable length: 2 m, jacket material: PUR, black; cULus approval; other cable lengths and qualities available, see www.turck.com |

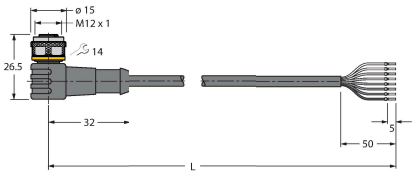


REI-E-113T8S-2B1024-H1181| 06/05/2023 05-19 | technical changes reserved