REI-E-113T12C-4B5000-H1181
Incremental Encoder
Efficiency Line

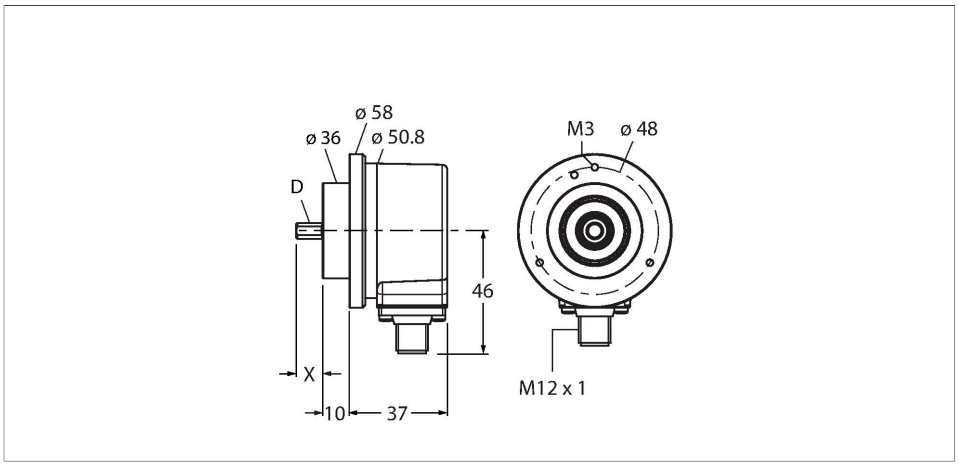

Features

- Clamping flange, Ø 58 mm
- Solid shaft, Ø 12 mm × 20 mm
- Optical measuring principle
- Shaft material: stainless steel
- Protection class IP64 on the shaft side
- -20…+70 °C
- Max. 4500 rev/min
- 5…30 VDC
- Male connector, M12 x 1 , 8-pole
- RS422 with inverted signals
- Pulse frequency max. 300 kHz
- 5000 pulses

Technical data

Type	REI-E-113T12C-4B5000-H1181
Ident. no.	100011653
Measuring principle	Optical
Max. Rotational Speed	4500 rpm
Moment of inertia of the rotor	1.8 x10^{-6} kgm^2
Starting torque	< 0.05 Nm
Ambient temperature	-20…+70 °C
Operating voltage	5…30 VDC
No-load current	≤ 90 mA
Output current	≤ 20 mA
Short-circuit protection	yes
Wire breakage/Reverse polarity protection	yes
Output function	RS422, with inverted signals
Output type	incremental
Resolution, incremental	5000 ppr
Pulse frequency max.	300 kHz
Signal level high	min. 2.5 V
Signal level low	max. 0.5 V
Design	Solid shaft
Flange type	Clamping flange
Flange diameter	Ø 58 mm
Shaft Type	Solid shaft
Shaft diameter D (mm)	12

Wiring diagram

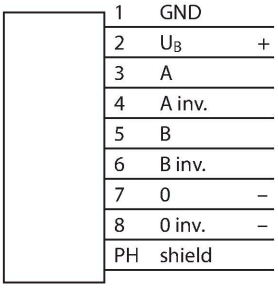

REI-E-113T12C-4B5000-H1181| 11/07/2019 21-05 | technical changes reserved

Technical data

Shaft length X	20 mm
Shaft material	Stainless steel
Housing material	Die-cast zinc
Electrical connection	Connector, M12 × 1
	M12, 8-pin
Axial shaft load	40 N
Radial shaft load	80 N
Vibration resistance (EN 60068-2-6)	10 g (100 m/s^2), 10…2000 Hz
Shock resistance (EN 60068-2-27)	1000 m/s^2, 6 ms
Protection class housing	IP65
Protection class shaft	IP64

Signal	Gnd	+U_B	A	A inv.	B	B inv.	0	0 inv.	Shield
Pin configuration	1	2	3	4	5	6	7	8	PH

Accessories

RCS-19-12-12 **1545354**

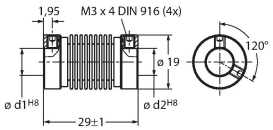

Bellows coupling, outer diameter: 19 mm, bore diameter: 12 mm/12 mm

RCS-19-12-10 **1545355**

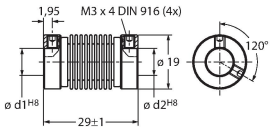

Bellows coupling, outer diameter: 19 mm, bore diameter: 12 mm/10 mm

Wiring accessories

Dimension drawing	Type	Ident. no.	
	RKC8T-2/TXL	**6625142**	Connection cable, female M12, straight, 8-pin, cable length: 2 m, sheath material: PUR, black; cULus approval; other cable lengths and qualities available, see www.turck.com



REI-E-113T12C-4B5000-H1181| 11/07/2019 21-05 | technical changes reserved