REI-E-114I12E-2B360-H1181
Incremental Encoder
Efficiency Line

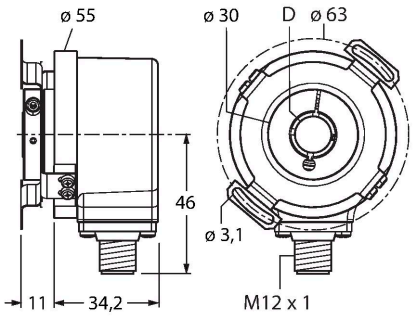



Technical data

Type	REI-E-114I12E-2B360-H1181
ID	100011771
Measuring principle	Optical
General data	
Max. rotational speed	4500 rpm
Moment of inertia of the rotor	6 × 10^{-6} kgm²
Starting torque	< 0.05 Nm
Output type	Incremental
Resolution incremental	360 ppr
Electrical data	
Operating voltage U_B	10…30 VDC
No-load current	≤ 100 mA
Output current	≤ 30 mA
Short-circuit protection	yes
Wire break/reverse polarity protection	yes
Pulse frequency max.	300 kHz
Signal level high	min. U_B - 1 V
Signal level low	max. 0.5 V
Output function	Push-Pull/HTL, with inverted signals
Mechanical data	
Flange type	Flange with stator coupling
Flange diameter	Ø 63 mm
Shaft Type	Hollow shaft

Features

- Flange with stator coupling, Ø 63 mm
- Hollow shaft, Ø 12mm
- Optical measuring principle
- Shaft material: stainless steel
- Protection class IP64 on housing and shaft side
- -20…+70 °C
- Max. 4500 rpm (continuous operation 3000 rpm)
- 10…30 VDC
- Male connector, M12 x 1 , 8-pole
- Push-pull, with inverted signals
- Pulse frequency max. 300 kHz
- 360 pulses per revolution

Wiring diagram

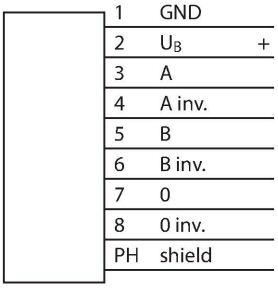

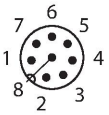

REI-E-114I12E-2B360-H1181| 02/21/2025 15-01 | technical changes reserved

Technical data

Shaft diameter D (mm)	12
Shaft material	Stainless steel
Housing material	Die-cast zinc
Electrical connection	Connector, M12 × 1
	8-pin
Axial shaft load	40 N
Radial shaft load	80 N
Environmental conditions	
Ambient temperature	-20…+70 °C
Vibration resistance (EN 60068-2-6)	10 g (100 m/s²), 10…2000 Hz
Shock resistance (EN 60068-2-27)	1000 m/s², 6 ms
Protection class	IP64
Protection class shaft	IP64

Wiring accessories

Dimension drawing	Type	ID	
	RKC8T-2/TXL	6625142	Connection cable, M12 female connector, straight, 8-pin, cable length: 2 m, jacket material: PUR, black; cULus approval
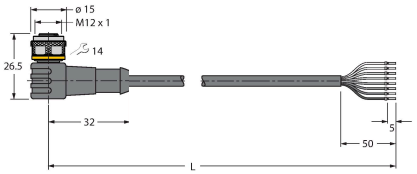	WKC8T-2/TXL	6625145	Connection cable, M12 female connector, angled, 8-pin, cable length: 2 m, jacket material: PUR, black; cULus approval

REI-E-114I12E-2B360-H1181| 02/21/2025 15-01 | technical changes reserved