REI-E-111T6C-2B500-C
Incremental Encoder
Efficiency Line

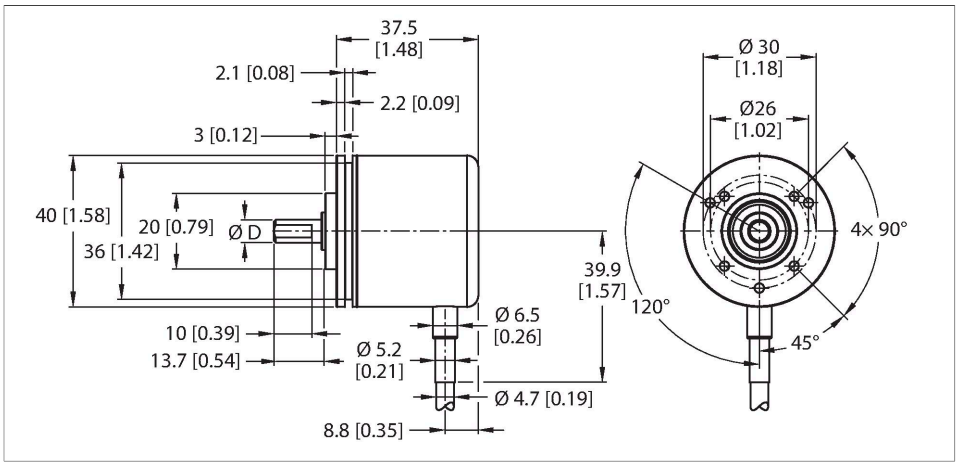

Features

- Ø 42 mm clamping flange
- Solid shaft, Ø 6mm x 12.5mm
- Optical measuring principle
- Shaft material, stainless steel
- Protection class IP64 on the shaft side
- -20…+70 °C
- Max. 4500 rev/min
- 10…30 VDC
- Cable connection, 8-pole
- Push-pull, with inverted signals
- Pulse frequency max. 300 kHz
- 500 pulses

Technical data

Type	REI-E-111T6C-2B500-C
Ident. no.	100011943
Measuring principle	Optical
Max. Rotational Speed	4500 rpm
Moment of inertia of the rotor	0.2 x10^{-6} kgm^2
Starting torque	< 0.05 Nm
Ambient temperature	-20…+70 °C
Operating voltage	10…30 VDC
No-load current	≤ 100 mA
Output current	≤ 30 mA
Short-circuit protection	yes
Wire breakage/Reverse polarity protection	yes
Output function	8-wire, Push-Pull/HTL, with inverted signals
Output type	incremental
Resolution, incremental	500 ppr
Pulse frequency max.	300 kHz
Signal level high	min. U_B - 1 V
Signal level low	max. 0.5 V
Design	Solid shaft
Flange type	Synchro/clamping flange
Flange diameter	Ø 40 mm
Shaft Type	Solid shaft
Shaft diameter D (mm)	6

REI-E-111T6C-2B500-C| 11/07/2019 22-02 | technical changes reserved

Technical data

Shaft length X	12.5 mm
Shaft material	stainless steel
Housing material	Aluminium
Electrical connection	Cable
	radial
cable length	2 m
Axial shaft load	20 N
Radial shaft load	40 N
Vibration resistance (EN 60068-2-6)	100 m/s², 55…2000 Hz
Shock resistance (EN 60068-2-27)	1000 m/s², 6 ms
Protection class housing	IP64
Protection class shaft	IP64

Signal	**Gnd**	**+U_B**	**A**	**A inv.**	**B**	**B inv.**	**0**	**0 inv.**	**Shield**
Core color	**WH**	**BN**	**GN**	**YE**	**GY**	**PK**	**BU**	**RD**	**Shield**
Signal	**0V sens**	**+U_B sens**	-	-	-	-	-	-	-
Core color	**GY PK**	**RD BU**	-	-	-	-	-	-	-

Accessories

RCS-19-06-06 **1545360**

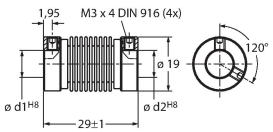

Bellows coupling, outer diameter: 19 mm, bore diameter: 6 mm/6 mm

RCS-15-08-06 **1545361**

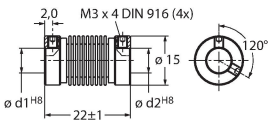

Bellows coupling, outer diameter: 15 mm, bore diameter: 8 mm/6 mm

RCS-15-06-06 **1545362**

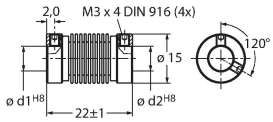

Bellows coupling, outer diameter: 15 mm, bore diameter: 6 mm/6 mm

RCS-15-06-04 **1545363**

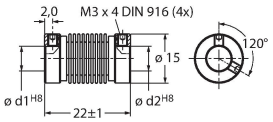

Bellows coupling, outer diameter: 15 mm, bore diameter: 6 mm/4 mm

RCS-19-10-06 **1545358**

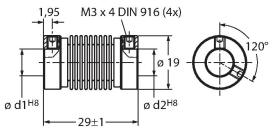

Bellows coupling, outer diameter: 19 mm, bore diameter: 10 mm/6 mm

REI-E-111T6C-2B500-C| 11/07/2019 22-02 | technical changes reserved