# REI-E-111TA0C-2B512-C
# Incremental Encoder
# Efficiency Line

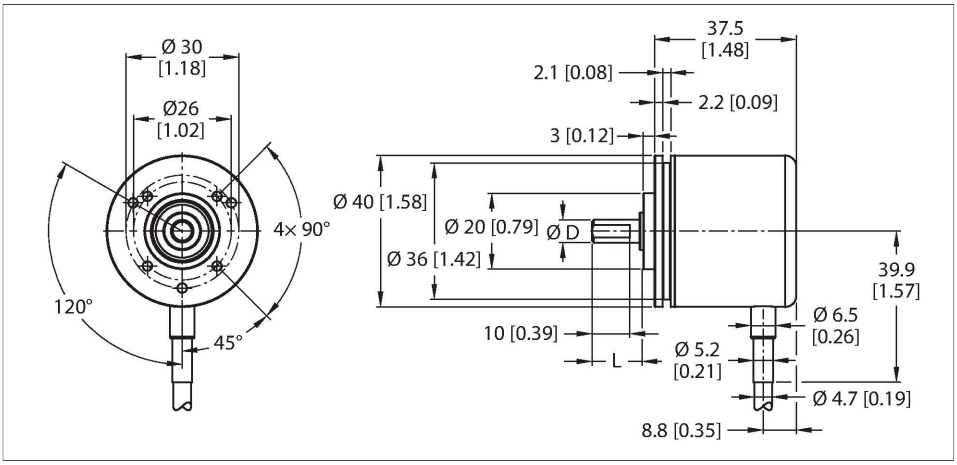


## Features

- Ø 42 mm clamping flange
- Solid shaft, Ø 6mm x 12.5mm
- Optical measuring principle
- Shaft material, stainless steel
- Protection class IP64 on housing and shaft side
- -20…+70 °C
- Max. 4500 rpm
- 10…30 VDC
- Cable connection, 8-pole
- Push-pull, with inverted signals
- Pulse frequency max. 300 kHz
- 512 pulses per revolution

## Technical data

| | |
|---|---|
| Type | REI-E-111TA0C-2B512-C |
| ID | 100011966 |
| Measuring principle | Optical |
| **General data** | |
| Max. Rotational Speed | 4500 rpm |
| Moment of inertia of the rotor | 0.2 × $10^{-6}$ kgm² |
| Starting torque | < 0.05 Nm |
| Output type | Incremental |
| Resolution, incremental | 512 ppr |
| **Electrical data** | |
| Operating voltage | 10…30 VDC |
| No-load current | 100 mA |
| Output current | ≤ 30 mA |
| Short-circuit protection | yes |
| Wire breakage/Reverse polarity protection | yes |
| Pulse frequency max. | 300 kHz |
| Signal level high | min. $U_B$ - 1 V |
| Signal level low | max. 0.5 V |
| Output function | Push-Pull/HTL, with inverted signals |
| **Mechanical data** | |
| Design | Solid shaft |
| Flange type | Synchro/clamping flange |
| Flange diameter | Ø 40 mm |

## Wiring diagram

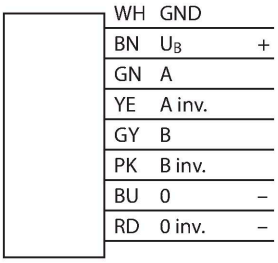


REI-E-111TA0C-2B512-C| 06/05/2023 05-17 | technical changes reserved

## Technical data

| | |
|---|---|
| Shaft Type | Solid shaft |
| Shaft diameter D [mm] | 6.35 |
| Shaft Length L [mm] | 12.5 |
| Shaft material | Stainless steel |
| Housing material | Aluminium |
| Electrical connection | Cable |
| | radial |
| cable length | 2 m |
| Axial shaft load | 20 N |
| Radial shaft load | 40 N |
| **Environmental conditions** | |
| Ambient temperature | -20…+70 °C |
| Vibration resistance (EN 60068-2-6) | 100 m/s², 55…2000 Hz |
| Shock resistance (EN 60068-2-27) | 1000 m/s², 6 ms |
| Protection class | IP64 |
| Protection class shaft | IP64 |

REI-E-111TA0C-2B512-C| 06/05/2023 05-17 | technical changes reserved