REI-E-112IA0E-2B2500-C
Incremental Encoder
Efficiency Line

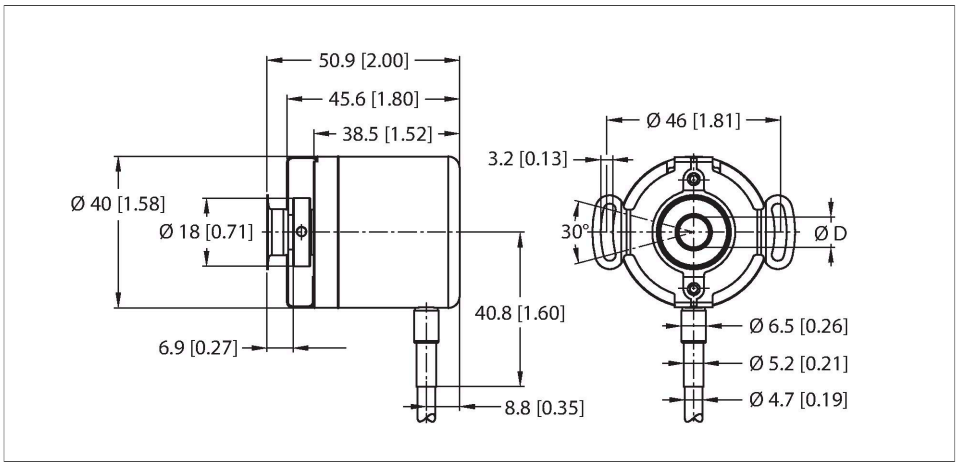

Features

- Flange with stator coupling, Ø 46 mm
- Blind hole hollow shaft, Ø 6.35 mm (plug-in depth max. 18 mm)
- Optical measuring principle
- Shaft material: stainless steel
- Protection class IP64 on housing and shaft side
- -20…+70 °C
- Max. 4500 rpm
- 10…30 VDC
- Cable connection, 8-pole
- Push-pull, with inverted signals
- Pulse frequency max. 300 kHz
- 2500 pulses per revolution

Technical data

Type	REI-E-112IA0E-2B2500-C
ID	100012076
Measuring principle	Optical
General data	
Max. rotational speed	4500 rpm
Moment of inertia of the rotor	0.2 × 10^{-6} kgm²
Starting torque	< 0.05 Nm
Output type	Incremental
Resolution incremental	2500 ppr
Electrical data	
Operating voltage U_B	10…30 VDC
No-load current	≤ 100 mA
Output current	≤ 30 mA
Short-circuit protection	yes
Wire break/reverse polarity protection	yes
Pulse frequency max.	300 kHz
Signal level high	min. U_B - 1 V
Signal level low	max. 0.5 V
Output function	Push-Pull/HTL, with inverted signals
Mechanical data	
Flange type	Flange with stator coupling
Flange diameter	Ø 46 mm
Shaft Type	Blind hole shaft

Wiring diagram

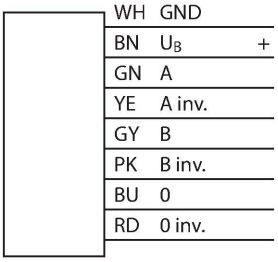

REI-E-112IA0E-2B2500-C| 02/21/2025 15-01 | technical changes reserved

Technical data

Shaft diameter D (mm)	6.35
Shaft Length L [mm]	18
Shaft material	Stainless steel
Housing material	Aluminium
Electrical connection	Cable
	radial
cable length	2 m
Axial shaft load	20 N
Radial shaft load	40 N
Environmental conditions	
Ambient temperature	-20…+70 °C
Vibration resistance (EN 60068-2-6)	100 m/s², 55…2000 Hz
Shock resistance (EN 60068-2-27)	1000 m/s², 6 ms
Protection class	IP64
Protection class shaft	IP64

REI-E-112IA0E-2B2500-C| 02/21/2025 15-01 | technical changes reserved