RES-181B8T-7AAR-H1151/N0
Absolute Rotary Encoder - Single-Turn
Industrial Line

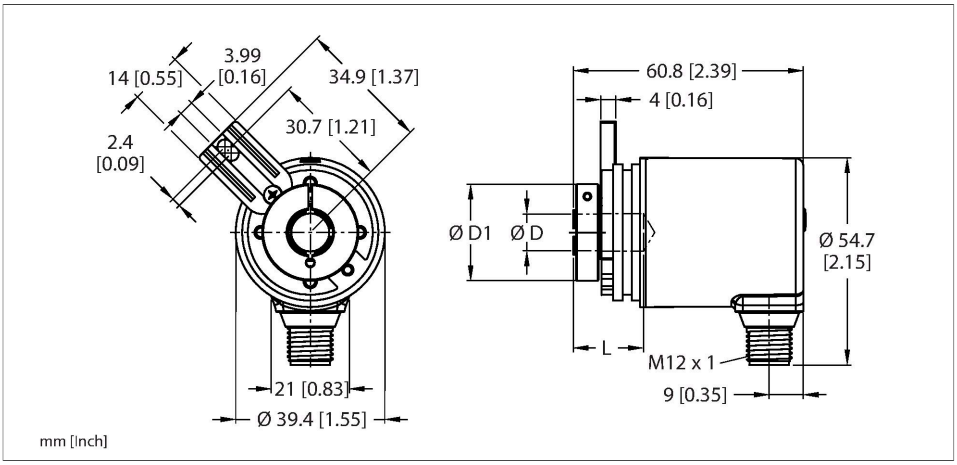

Technical data

Type	RES-181B8T-7AAR-H1151/N0
Ident. no.	100016366
Measuring principle	**Magnetic**
Max. Rotational Speed	4000 rpm
Starting torque	< 0.01 Nm
Measuring range	0…360 °
Repeatability (at 25 °C)	± 0.2 °
Absolute accuracy (at 25 °C)	± 1 °
Ambient temperature	-40…+85 °C
Operating voltage	10…30 VDC
No-load current	≤ 38 mA
Short-circuit protection	yes
Output type	Absolute singleturn
Resolution singleturn	14 Bit
Output function	Analog output
Current output	4…20 mA
Design	**Hollow shaft**
Flange type	Flange with mounting element
Flange diameter	Ø 36 mm
Shaft Type	Blind hole shaft
Shaft diameter D [mm]	8
Wavelength L [mm]	18.5
Shaft material	Stainless Steel

Features

- Flange with long torque stop
- Hollow shaft, Ø 8mm
- Optical measuring principle
- Shaft material, stainless steel
- IP67 rated on the shaft side
- -40…+85 °C
- Max. 4000 rev/min
- 10…30 VDC
- Analog output 4…20 mA
- Counting mode CW
- M12 × 1 male connector, 5-pin
- 360° resolved in 14 bit (16384 positions)

Wiring diagram

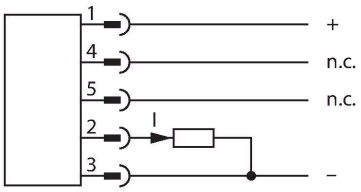

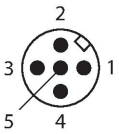

Functional principle

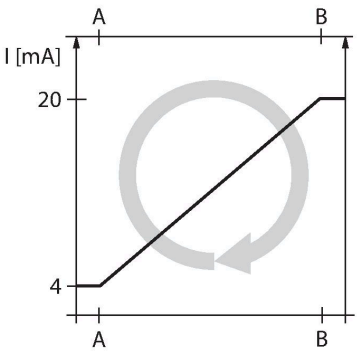

RES-181B8T-7AAR-H1151/N0| 09/09/2020 18-08 | technical changes reserved

Technical data

Housing material	Die-cast zinc
Electrical connection	Connector, M12 × 1
Axial shaft load	20 N
Radial shaft load	40 N
Vibration resistance (EN 60068-2-6)	30 g (300 m/s²), 10…2000 Hz
Shock resistance (EN 60068-2-27)	30 g (300 m/s²), 10…2000 Hz
Protection class	IP67
Protection class shaft	IP67

Signal	Gnd	$+U_B$	Analog output	n.c.	n.c.
Pin assignment	3	1	2	4	5

RES-181B8T-7AAR-H1151/N0| 09/09/2020 18-08 | technical changes reserved