WSM WKM 56-8M/S3059
Actuator and Sensor Cable – Extension Cable

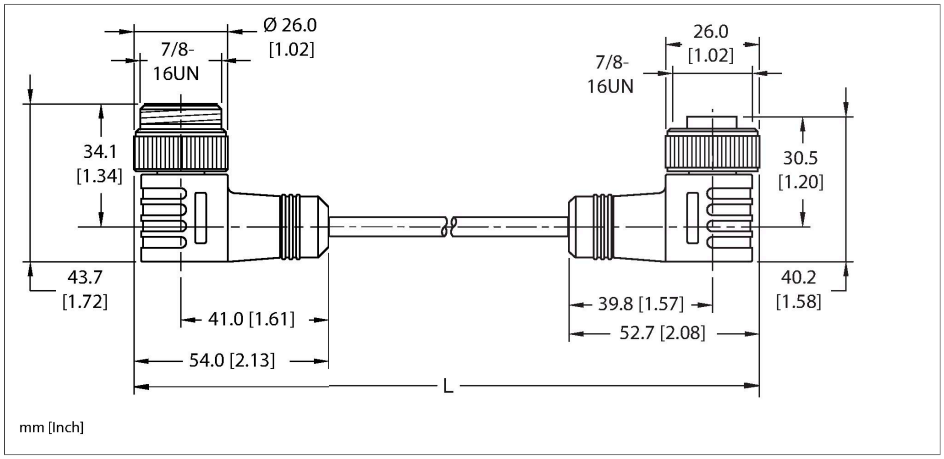

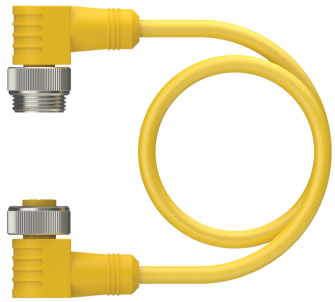

Technische Daten

Type	WSM WKM 56-8M/S3059
ID	100016516
Special version	S3059 = Weldlife Cable - TC-ER and C-SA FT4 Flame Rating
Connector A	Male, 7/8"-16 UN, Right angle
Number of contacts	5
Contacts	Brass, CuZn, Gold-plated
Contact carriers	Plastic, TPU, Yellow
Connector body	Plastic, TPU, Yellow
Coupling nut	Brass, CuZn, Nickel-plated
Tightening torque	2 Nm
Mechanical life	> 100 Mating cycles
Pollution degree	3
Protection class (When coupled)	IP67, IP68, IP69, IP69K
	NEMA: 1, 3, 4, 6P, 12
Connector B	Female, 7/8"-16 UN, Right angle
Number of contacts	5
Contacts	Brass, CuZn, Gold-plated
Contact carriers	Plastic, Yellow
Connector body	Plastic, TPU, Yellow
Coupling nut	Brass, CuZn, Nickel-plated
Tightening torque	2 Nm
Mechanical life	> 100 Mating cycles
Pollution degree	3
Protection class (When coupled)	IP67, IP68, IP69, IP69K

Features

IP67/IP68
IP69/IP69K
DEGREE OF PROTECTION

- 7/8" Male, Right-angle, 5-pin
- 7/8", Female, Right-angle, 5-pin
- Power Tray/Exposed Run/Direct Burial Cable
- Yellow TPE jacket, 5X16 AWG
- Sunlight Resistant
- -40 Cold Bend Rating
- Oil Resistant
- Flame Ratings: UL 1685 FT4, UL 1061, CSA FT1, CSA FT4

Cable cross section

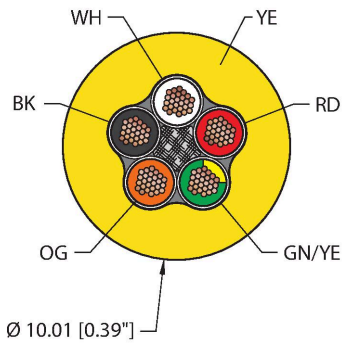

Contact assignment

Technische Daten

	NEMA: 1, 3, 4, 6P, 12
Cable data	
Cable ID	RF51715
Total number of conductors	5
Cable diameter	Ø 10.01 mm
Length (L)	8 m, (+50mm or 4% of length/-0.0, Whichever is greater)
Cable jacket	TPE, Yellow
Conductor diameter	0.105 "
Conductor material	BC (bare copper)
Conductor insulation material	PVC/Nylon (Nylon overcoat)
Conductor size	5 x 16 AWG [Similar to 1.50 mm²]
Number of strands x O.D.	65 x 34 AWG
Conductor colors	WH, RD, GN/YE, OG, BK
Electrical properties at +20 °C	
Rated voltage	600 V
Current	10 A
Mechanical and chemical properties	
Bending radius (static)	≥ 5 x Ø
Bending radius (dynamic)	≥ 10 x Ø
UL cold bend rating	-40 °C
Ambient temperature range (static)	-40…+90 °C
Ambient temperature range (dynamic)	5…+90 °C
Temperature range (installation)	-10…+90 °C
Approval	
Approvals	UL 2238 CSA C22.2 No. 182.3 CE UKCA RoHS
Note	
	- Flex ratings may be reduced if used in extreme temperatures, exposure to certain chemicals, operating above the rated cycle speed, or operating below the rated cable bend radius.
	- We reserve the right to make technical alterations without prior notice.

Connector A Connector B

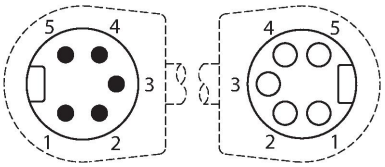

Circuit Diagram

WSM WKM 56-8M/S3059| 21-02-2025 20-05 | Technische Änderungen vorbehalten