PS325-010D-02-LI2UPN8-H1141
Pressure Sensor – Differential Pressure: 0…10 bar

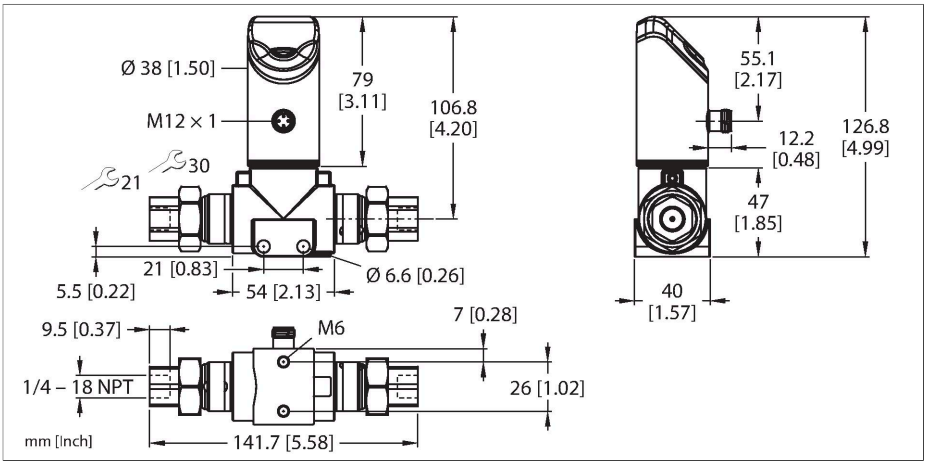



Technical data

Type	PS325-010D-02-LI2UPN8-H1141
ID	100017531
Medium temperature	-30…+80 °C
Application area	Liquids and gases
Pressure range	
Pressure type	Differential Pressure
Pressure range	0…10 bar
	0…145.04 psi
	0…1 MPa
Admissible overpressure	≤ 50 bar
Burst pressure	≥ 50 bar
Response time	≤ 3 ms
Electrical data	
Operating voltage U_B	18…33 VDC
Protective measure	SELV; PELV according to EN 50178
Short-circuit/reverse polarity protection	yes, cyclic / yes (voltage supply)
Capacitive load	100 nF
Insulation class	III
Outputs	
Output 1	Switching output or IO-Link mode
Output 2	Analog or switching output
Switching output	
Communication protocol	IO-Link
Output function	NO/NC, PNP/NPN

Features

- 4-digit, 2-color (red/green), 12-segment display, rotatable by 180°
- Housing is rotatable after mounting the process connection
- Pressure range 0…10 bar diff.
- 18…33 V DC
- NO/NC contact, PNP/NPN output, analog output (current/voltage), IO-Link
- T-type
- Process connection 1/4 inch NPT-18 female thread
- Connector device, M12 × 1

Wiring diagram

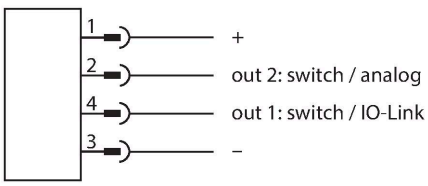

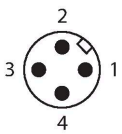

Functional principle

The PS325/6 differential pressure sensors have two pressure connections with ceramic measuring cells to detect different pressures, from which the difference is formed. As a

PS325-010D-02-LI2UPN8-H1141| 02/21/2025 17-49 | technical changes reserved

Technical data

Rated operational current	0.25 A
Switching frequency	≤ 300 Hz
Switching point distance	≥ 0.5 %
Switch point:	(Min. + 0.005 × range)…100 % of full scale
Release point(s)	Min. up to (SP - 0.005 × range)
Switching cycles	≥ 100 mil.
Analog output	
Current output	4…20 mA
High level signal current	20.5 mA
Low level signal current	3.8 mA
Load resistance current output	≤ 0.5 kΩ
Voltage output	0…10 V
Load resistance voltage output	≥ 8 kΩ
Accuracy LHR	± 0.5 % FS BSL
IO-Link	
IO-Link specification	V 1.1
IO-Link port type	Class A
Transmission physics	Corresponds to 3-wire physics (PHY2)
Transmission rate	COM 2/38.4 kbps
Process data width	16 bit
Measured value information	14 bit
Switching point information	2 bit
Frame type	2.2
Minimum cycle time	3 ms
Programming	FDT/DTM
Included in the SIDI GSDML	Yes
Programming	
Programming options	Start/end value analog output; switch/ release points; PNP/NPN; NO/NC contact; hysteresis/window function; damping; pressure unit; peak pressure memory
Mechanical data	
Housing material	Stainless-steel/Plastic, 1.4404 (AISI 316L)/Grilamid TR90 UV/Elastollan C 65 A 15 HPM 000/Ultramid A3X2G5
Materials (contact with media)	Stainless steel 1.4404 (AISI 316L), Al_2O_3, FKM
Process connection	1/4" NPT-18 female thread

result of the pressure acting on the ceramic measuring cell, a signal that is proportional to the pressure is generated and processed electronically. Depending on the sensor variant, either switching or analog signals are available All PS325/6 variants have IO-Link. The PS325/6 sensors operate in various positive pressure ranges up to a differential of 250 bar. The connection with higher pressure can be configured via the menu (High-site switch).

PS325-010D-02-LI2UPN8-H1141| 02/21/2025 17-49 | technical changes reserved

Technical data

Wrench size pressure connection / coupling nut	30
Max. tightening torque of housing nut	35 Nm
Electrical connection	Connector, M12 × 1
Protection class	IP66 IP67 IP69K
Environmental conditions	
Ambient temperature	-40…+80 °C
Storage temperature	-40…+80 °C
Shock resistance	50 g (11 ms) EN 60068-2-27
EMV	EN 61000-4-2 ESD:4 kV CD/8 kV AD EN 61000-4-3 HF radiated: 15 V/m EN 61000-4-4 Burst: 2 kV EN 61000-4-6 HF cable-bound: 10 V EN 61000-6-2 0.5 kV, 42 Ω EN 61326-2-3
Tests/approvals	
Approvals	CE Metrological certification (RUS) cULus
UL registration number	E183243
Reference conditions acc. to IEC 61298-1	
Temperature	15…+25 °C
Atmospheric pressure	860…1030 hPa abs.
Humidity	45…75 % rel.
Auxiliary power	24 VDC
Displays/Operating elements	
Display	4-digit 12-segment display, rotatable by 180°, red or green
Switching state	2 × LEDs, Yellow
Unit display	5 x LEDs green (bar, psi, kPa, MPa, misc)
MTTF	100 years acc. to SN 29500 (Ed. 99) 40 °C

PS325-010D-02-LI2UPN8-H1141| 02/21/2025 17-49 | technical changes reserved