PT400R-2104-U3-H1141/R
Pressure Transmitter – With Voltage Output (3-wire)

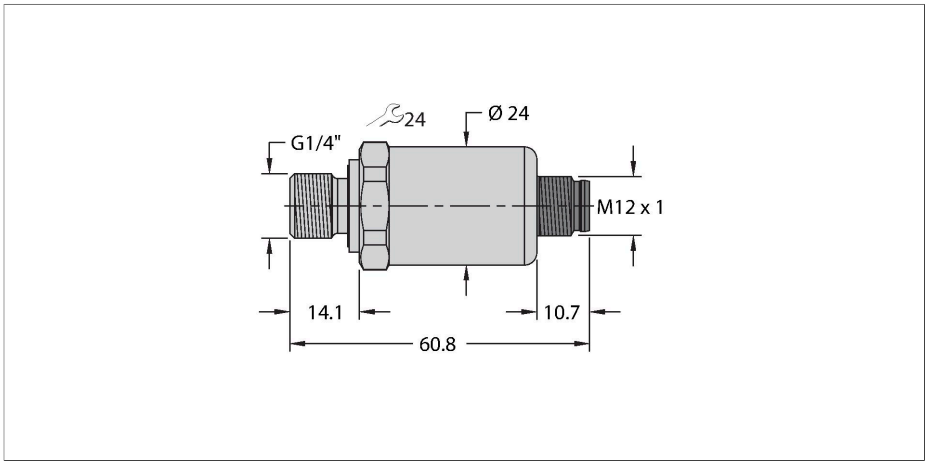

Features

- For mobile hydraulic applications
- Fully welded metal measuring cell
- Sealless
- With pressure tip orifice
- Compact and robust design
- Excellent EMC properties
- Excellent accuracy and long-term stability
- Kfz-Norm ISO 16750
- Pressure range 0…400 bar rel.
- 7…33 VDC
- Analog output 0.5…4.5 V
- Process connection G1/4" male thread
- Plug-in device, M12 × 1

Technical data

Type	PT400R-2104-U3-H1141/R
Ident. no.	100021858
Pressure range	
Relative pressure	0…400 bar rel.
	0…5802 psi
	0…40 MPa
Admissible overpressure	≤ 1200 bar
Burst pressure	≥ 2400 bar
Response time	< 2 ms, typ. 1 ms
Long-term stability	0.3 % FS, acc. to IEC EN 61298-2
Power supply	
Operating voltage	7…33 VDC
Current consumption	≤ 7 mA
Short-circuit/reverse polarity protection	yes / yes
Protection type and class	IP69K / III
Insulation voltage	500 VDC
Outputs	
Output 1	Analog output
Output function	Analog output voltage
Analog output	
Voltage output	0.5…4.5 V
Load	≤ 100 nF/>10 kΩ
Accuracy LHR	± 0.5 % FS BSL

Wiring diagram

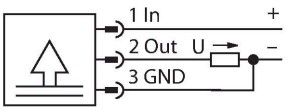

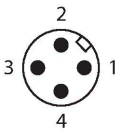

Functional principle

The PT … -2100 pressure sensors are especially developed for demanding mobile hydraulic applications and work with a fully welded metal measuring cell. Depending on the sensor type used, the processed signal is available either as analog current or voltage output.

PT400R-2104-U3-H1141/R| 09/24/2020 04-23 | technical changes reserved

Technical data

Temperature behaviour	
Medium temperature	-40…+125 °C
Temperature coefficient	± 0.2 % of full scale/10 K
Ambient conditions	
Ambient temperature	-40…+100 °C
Storage temperature	-50…+100 °C
Vibration resistance	Test VI (12 g, sinusodial 18 g random vibration)
Shock resistance	50 g, 11 ms, half sine curve, 1000x/ axis , acc. to ISO 16750-3
EMV	Interference Immunity/Interference Emission EN 61326-2-3 - Pressure transducer ISO 13766 - Earthmoving machinery DIN EN 13309 - Construction machinery DIN ISO 14982 - Forestry and agriculture CISPR11 Immunity Motor Vehicle Directive ISO 11452-2, HF (Field), 100 V/m (200… 2000 MHz) ISO 11452-4, HF (BCI), 100 mA (20… 400 MHz) ISO 10605, ESD, ±15 kV contact, ±15 kV air ISO 7637-2 3), pulses 1, 2a, 2b, 3a, 3b (test level 4) ISO 16750-2, load dump, 155 V (1 Ω, 300 ms) Motor vehicle directive ECE R10 Motor vehicle directive 2004/104/EC
Housing	
Housing material	Stainless-steel/Plastic, 1.4404 (AISI 316L)/polyacrylamide 50 % GF UL 94 V-0
Pressure connection material	Stainless steel 1.4404 (AISI 316L)
Pressure transducer material	Stainless steel 1.4404 (AISI 316L)
Process connection	G 1/4" male thread
Wrench size pressure connection / coupling nut	24
Electrical connection	Connector, M12 × 1
Max. tightening torque housing nut	20 Nm
Reference conditions acc. to IEC 61298-1	
Temperature	15…+25 °C
Atmospheric pressure	860…1060 hPa abs.
Humidity	45 % rel.
Auxiliary power	24 VDC
Approvals	UL E302799

PT400R-2104-U3-H1141/R| 09/24/2020 04-23 | technical changes reserved

Technical data

MTTF	1238 years acc. to SN 29500 (Ed. 99) 30 °C

PT400R-2104-U3-H1141/R| 09/24/2020 04-23 | technical changes reserved