PT0.16R-1504-I2-H1143/D840
Pressure Transmitter – With Current Output (2-Wire)

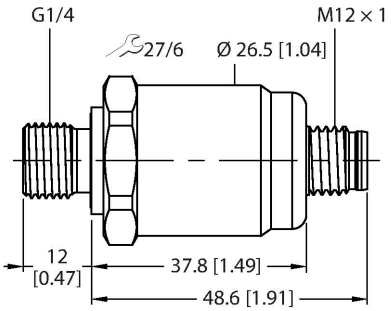



Technical data

Type	PT0.16R-1504-I2-H1143/D840
ID	100022042
Medium temperature	-15…+85 °C
Pressure type	Relative pressure
Pressure range	0…0.16 bar
	0…2.32 psi
	0…0.016 MPa
Admissible overpressure	≤ 2 bar
Permissible vacuum	-0.3 bar
Burst pressure	≥ 2 bar
Response time	< 150 ms
Adjustment position	Vertical, pressure connection at bottom
Vertical position error, pressure connection at top	+ 0.2 mbar
Horizontal position error	+ 0.1 mbar
Long-term stability	± 0.25 % FS, Acc. to IEC EN 60770-1
Power supply	
Operating voltage U_B	10…30 VDC
Current consumption	≤ 23 mA
Short-circuit/reverse polarity protection	yes / yes
Insulation class	III
Outputs	
Output 1	Analog output

Features

- Ceramic measuring cell
- Extremely high measuring accuracy
- Compact and robust design
- Excellent temperature behavior
- Pressure range 0…160 mbar rel.
- 10…30 VDC
- Analog output 4…20 mA
- Process connection G1/4" male thread (back sealing) according to DIN EN ISO 1179-2 with FPM profile sealing ring
- Connector device, M12 × 1

Wiring diagram

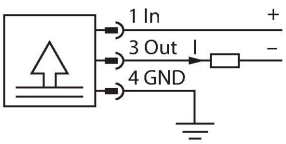

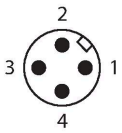

Functional principle

The pressure sensors in the PT…-1500 product series operate with a ceramic measuring cell in various micropressure ranges of up to -100…600 mbar in 2- or 3-wire technology. Depending on the sensor variant, the processed signal is available as an analog

PT0.16R-1504-I2-H1143/D840| 02/21/2025 18-12 | technical changes reserved

Technical data

Analog output	
Current output	4…20 mA
Load	≤ (supply voltage -10)/20 kΩ
Resolution	<± 0.1 % FS
Accuracy LHR	±0.35 % FS (FS < 100 mbar ±0.7 % FS)
Mechanical data	
Housing material	Stainless-steel/Plastic, 1.4404 (AISI 316L)/polyarylamide 50 % GF UL 94 V-0
Process connection	G1/4" male thread (back sealing) according to DIN EN ISO 1179-2 with FPM profile sealing ring
Pressure connection material	Stainless steel 1.4404 (AISI 316L)
Material pressure transducer	Ceramic Al_2O_3
Sealing material	FPM
Wrench size pressure connection / coupling nut	27
Max. tightening torque of housing nut	27 Nm
Electrical connection	Connector, M12 × 1
Protection class	IP67
Environmental conditions	
Ambient temperature	-25…+85 °C
Storage temperature	-40…+85 °C
Shock resistance	50 g, 6 ms, half sinusoidal curve, all 6 directions, free fall from 1 m onto concrete (6x) acc. to IEC 68-2-27
Vibration resistance	20 g, 15…2000 Hz, 15…25 Hz with amplitude ± 15 mm, 1 octave/minute in all 3 directions, 50 continuous loads, according to IEC 68-2-6
Tests/approvals	
UL registration number	E302799
Reference conditions acc. to IEC 61298-1	
Temperature	15…+25 °C
Atmospheric pressure	800…1060 hPa abs.
Humidity	45 % rel.
Auxiliary power	24 VDC
Temperature behaviour	
Temperature coefficient span TkS	± 0.07 % FS/10 K
MTTF	965 years acc. to SN 29500 (Ed. 99) 40 °C
Included in delivery	Profile seal FKM special (1 pc)

output signal (4…20 mA, 0…10 V, 0…5 V, ratiometric).
In addition to the standard variants, there are special sensors for uses such as ATEX areas. A wide range of process connections and electrical connections offer a high degree of flexibility in a wide range of applications.

PT0.16R-1504-I2-H1143/D840| 02/21/2025 18-12 | technical changes reserved

Technical data

Type	PT0.16R-1504-I2-H1143/D840
ID	100022042
Pressure type	Relative pressure
Pressure range	0…0.16 bar
	0…2.32 psi
	0…0.016 MPa
Admissible overpressure	≤ 2 bar
Permissible vacuum	-0.3 bar
Burst pressure	≥ 2 bar
Response time	< 150 ms
Adjustment position	Vertical, pressure connection at bottom
Vertical position error, pressure connection at top	+ 0.2 mbar
Horizontal position error	+ 0.1 mbar
Long-term stability	0.25 % FS, Acc. to IEC EN 60770-1
Power supply	
Operating voltage U_B	10…30 VDC
Current consumption	≤ 23 mA
Short-circuit/reverse polarity protection	yes / yes
Protection class	IP67
Insulation class	III
Insulation voltage	500 VDC
Outputs	
Output 1	Analog output
Analog output	
Current output	4…20 mA
Load	≤ (supply voltage -10)/20 kΩ
Resolution	<± 0.1 % FS
Accuracy LHR	±0.35 % FS (FS < 100 mbar ±0.7 % FS)
Temperature behaviour	
Medium temperature	-15…+85 °C
Temperature coefficient span TkS	± 0.07 % FS/10 K
Environmental conditions	
Ambient temperature	-25…+85 °C
Storage temperature	-40…+85 °C
Vibration resistance	20 g, 15…2000 Hz, 15…25 Hz with amplitude ± 15 mm, 1 octave/minute in all 3 directions, 50 continuous loads, according to IEC 68-2-6

PT0.16R-1504-I2-H1143/D840| 02/21/2025 18-12 | technical changes reserved

Technical data

Shock resistance	50 g, 6 ms, half sinusoidal curve, all 6 directions, free fall from 1 m onto concrete (6x) acc. to IEC 68-2-27
Mechanical data	
Housing material	Stainless-steel/Plastic, 1.4404 (AISI 316L)/polyarylamide 50 % GF UL 94 V-0
Pressure connection material	Stainless steel 1.4404 (AISI 316L)
Material pressure transducer	Ceramic Al_2O_3
Sealing material	FPM
Process connection	G1/4" male thread (back sealing) according to DIN EN ISO 1179-2 with FPM profile sealing ring
Wrench size pressure connection / coupling nut	27
Electrical connection	Connector, M12 × 1
Max. tightening torque of housing nut	27 Nm
Reference conditions acc. to IEC 61298-1	
Temperature	15…+25 °C
Atmospheric pressure	800…1060 hPa abs.
Humidity	45 % rel.
Auxiliary power	24 VDC
Tests/approvals	
Approvals	cULus
UL registration number	E302799
MTTF	965 years acc. to SN 29500 (Ed. 99) 40 °C
Included in delivery	Profile seal FKM special (1 pc)

PT0.16R-1504-I2-H1143/D840| 02/21/2025 18-12 | technical changes reserved