PT60R-2004-IOL-H1141/X
Pressure Transmitter – IO-Link with Two Switching Outputs

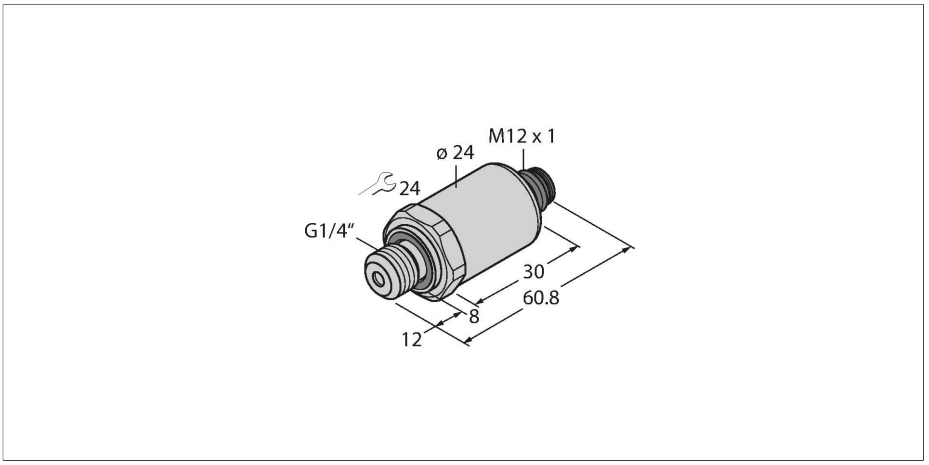

Technical data

Type	**PT60R-2004-IOL-H1141/X**
ID	100022263
Medium temperature	-40…+135 °C
Pressure type	Relative pressure
Pressure range	0…60 bar
	0…870.23 psi
	0…6 MPa
Admissible overpressure	≤ 180 bar
Burst pressure	≥ 360 bar
Response time	< 2 ms, typ. 1 ms
Long-term stability	± 0.25 % FS, according to IEC EN 60770-1
Power supply	
Operating voltage U_B	18…33 VDC
Short-circuit/reverse polarity protection	yes / yes
Insulation class	III
Outputs	
Output 1	Switching output or IO-Link mode
Output 2	Switching output
Switching output	
Communication protocol	IO-Link
Output function	NO/NC, PNP/NPN
Switching frequency	≤ 100 Hz
Switching point distance	≥ 0.5 %

Features

- Fully welded metal measuring cell
- Pressure range 0…60 bar rel.
- Pressure peak orifice
- 18…33 V DC
- NO/NC contact, 2 × PNP/NPN outputs, IO-Link
- Process connection G1/4" male thread (back sealing) according to DIN EN ISO 1179-2 with FPM profile sealing ring
- Connector device, M12 × 1

Wiring diagram

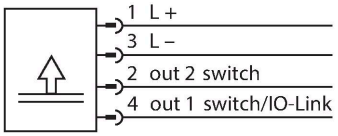

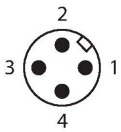

Functional principle

The pressure sensors in the PT…-2000 product series operate with a fully welded metal measuring cell in various pressure ranges of up to -1…1000 bar in 2-, 3- or even 4-wire technology. Depending on the sensor variant, the processed signal is available as an analog output signal (4…20 mA, 0… 10 V, 0…5 V, 1…6 V, ratiometric) or as a digital IO-Link process parameter. The IO-Link sensor variants also have two independently configurable switching outputs.
In addition to the standard variants, there are special sensors for uses such as ATEX areas or for oxygen applications.
A wide range of process connections and electrical connections offer a high degree of flexibility in a wide range of applications.

PT60R-2004-IOL-H1141/X| 02/21/2025 18-12 | technical changes reserved

Technical data

Switch point:	(Min. + 0.005 × range)…100 % of full scale
Release point(s)	Min. up to (SP - 0.005 × range)
Switching cycles	≥ 100 mil.
Resolution	<± 0.1 % FS
Accuracy LHR	±0.3 % FS (typical; max. ±0.5 % FS)
IO-Link	
IO-Link specification	V 1.1
Transmission physics	corresponds to 3-wire physics (PHY2)
Transmission rate	COM 2/38.4 kbps
Frame type	2.2
Programming	FDT/DTM
Programming options	Offset; filter; switching points; hysteresis/ filter function, NC/NO; min./max. pressure values, pressure peak counter; operating hours counter
Mechanical data	
Housing material	Stainless-steel/Plastic, 1.4404 (AISI 316L)/polyarylamide 50 % GF UL 94 V-0
Process connection	G1/4" male thread (back sealing) according to DIN EN ISO 1179-2 with FPM profile sealing ring
Pressure connection material	Stainless steel 1.4404 (AISI 316L)
Material pressure transducer	Stainless steel 1.4016 (AISI 430)
Wrench size pressure connection / coupling nut	24
Max. tightening torque of housing nut	20 Nm
Electrical connection	Connector, M12 × 1
Protection class	IP67
Environmental conditions	
Ambient temperature	-30…+85 °C
Storage temperature	-50…+100 °C
Shock resistance	100 g, 11 ms, half sinusoidal curve, all 6 directions, free fall from 1 m onto concrete (6x) acc. to IEC 68-2-27
Vibration resistance	20 g, 15…2000 Hz, 15…25 Hz with amplitude ± 15 mm, 1 octave/minute in all 3 directions, 50 continuous loads
Tests/approvals	
UL registration number	E302799
Reference conditions acc. to IEC 61298-1	
Temperature	15…+25 °C

PT60R-2004-IOL-H1141/X| 02/21/2025 18-12 | technical changes reserved

Technical data

Atmospheric pressure	860…1060 hPa abs.
Humidity	45…75 % rel.
Auxiliary power	24 VDC
Temperature behaviour	
MTTF	1200 years acc. to SN 29500 (Ed. 99) 40 °C
Included in delivery	FKM special profile seal (1x)

Technical data

Type	PT60R-2004-IOL-H1141/X
ID	100022263
Pressure type	Relative pressure
Pressure range	0…60 bar
	0…870.23 psi
	0…6 MPa
Admissible overpressure	≤ 180 bar
Burst pressure	≥ 360 bar
Response time	< 2 ms, typ. 1 ms
Long-term stability	0.25 % FS, according to IEC EN 60770-1
Power supply	
Operating voltage U_B	18…33 VDC
	In IO-Link mode
	9…33 VDC
	In SIO mode
Short-circuit/reverse polarity protection	yes / yes
Protection class	IP67
Insulation class	III
Insulation voltage	750 VDC
Outputs	
Output 1	Switching output or IO-Link mode
Output 2	Switching output
Switching output	
Communication protocol	IO-Link
Output function	NO/NC, PNP/NPN
Switching current	≤ 100 mA
Switching frequency	≤ 100 Hz
Switching point distance	≥ 0.5 %
Switch point:	(Min. + 0.005 × range)…100 % of full scale

PT60R-2004-IOL-H1141/X| 02/21/2025 18-12 | technical changes reserved

Technical data

Release point(s)	Min. up to (SP - 0.005 × range)
Switching cycles	≥ 100 mil.
Switch point SP1	Factory setting: 50 % of measuring range end value
Release point rP1	Factory setting: 25 % of measuring range end value
Switching point SP2	Factory setting: 60 % of measuring range end value
Release point rP2	Factory setting: 30 % of measuring range end value
Resolution	<± 0.1 % FS
Accuracy LHR	±0.3 % FS (typical; max. ±0.5 % FS)
IO-Link	
IO-Link specification	V 1.1
Programming	FDT/DTM
Transmission physics	corresponds to 3-wire physics (PHY2)
Transmission rate	COM 2/38.4 kbps
Frame type	2.2
Temperature behaviour	
Medium temperature	-40…+135 °C
Temperature coefficient	± 0.2 % of full scale/10 K
Environmental conditions	
Ambient temperature	-30…+85 °C
Storage temperature	-50…+100 °C
Vibration resistance	20 g, 15…2000 Hz, 15…25 Hz with amplitude ± 15 mm, 1 octave/minute in all 3 directions, 50 continuous loads, acc. to IEC 68-2-6
Shock resistance	100 g, 11 ms, half sinusoidal curve, all 6 directions, free fall from 1 m onto concrete (6x) acc. to IEC 68-2-27
Mechanical data	
Housing material	Stainless-steel/Plastic, 1.4404 (AISI 316L)/polyarylamide 50 % GF UL 94 V-0
Pressure connection material	Stainless steel 1.4404 (AISI 316L)
Material pressure transducer	Stainless steel 1.4016 (AISI 430)
Process connection	G1/4" male thread (back sealing) according to DIN EN ISO 1179-2 with FPM profile sealing ring
Wrench size pressure connection / coupling nut	24
Electrical connection	Connector, M12 × 1
Max. tightening torque of housing nut	20 Nm

PT60R-2004-IOL-H1141/X| 02/21/2025 18-12 | technical changes reserved

Technical data

Reference conditions acc. to IEC 61298-1	
Temperature	15…+25 °C
Atmospheric pressure	860…1060 hPa abs.
Humidity	45…75 % rel.
Auxiliary power	24 VDC
Programming options	Offset; filter; switching points; hysteresis/ filter function, NC/NO; min./max. pressure values, pressure peak counter; operating hours counter
Tests/approvals	
Approvals	cULus
UL registration number	E302799
MTTF	1200 years acc. to SN 29500 (Ed. 99) 40 °C
Included in delivery	FKM special profile seal (1x)

PT60R-2004-IOL-H1141/X| 02/21/2025 18-12 | technical changes reserved