# PT0.25R-1001-IOL-H1141
# Pressure Transmitter – With 2 Switching Outputs and IO-Link

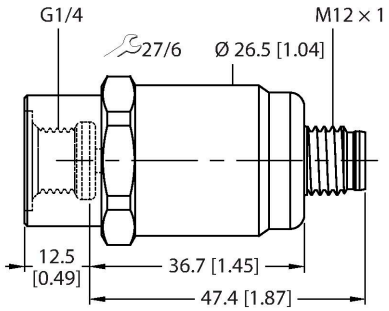


## Technical data

| | |
|---|---|
| **Type** | **PT0.25R-1001-IOL-H1141** |
| ID | 100024337 |
| Medium temperature | -40…+125 °C |
| Pressure type | Relative pressure |
| Pressure range | 0…0.25 bar |
| | 0…3.63 psi |
| | 0…0.025 MPa |
| Admissible overpressure | ≤ 3 bar |
| Burst pressure | ≥ 3 bar |
| Response time | < 2 ms, typ. 1 ms |
| Long-term stability | ± 0.25 % FS, according to IEC EN 60770-1 |
| **Power supply** | |
| Operating voltage $U_B$ | 18…33 VDC |
| Short-circuit/reverse polarity protection | yes / yes |
| Insulation class | III |
| **Outputs** | |
| Output 1 | Switching output or IO-Link mode |
| Output 2 | Switching output |
| **Switching output** | |
| Communication protocol | IO-Link |
| Output function | NO/NC, PNP/NPN |
| Switching frequency | ≤ 100 Hz |
| Switching point distance | ≥ 0.5 % |

## Features

- Ceramic measuring cell
- Compact and robust design
- Excellent EMC properties
- Pressure range 0…0.25 bar rel.
- 18…33 V DC
- NO/NC contact, 2 × PNP/NPN outputs, IO-Link
- Process connection G1/4" female thread, front sealing
- Connector device, M12 × 1

## Wiring diagram

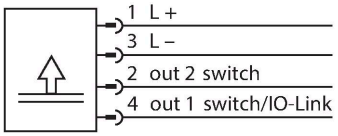


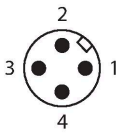


## Functional principle

The pressure sensors in the PT…-1000 product series operate with a ceramic measuring cell in various pressure ranges of up to -1…60 bar in 2-, 3- or even 4-wire technology. Depending on the sensor variant, the processed signal is available as an analog output signal (4…20 mA, 0…10 V, 0…5 V, 1…6 V, ratiometric) or as a digital IO-Link process parameter. The IO-Link sensor variants also have two independently configurable switching outputs.
In addition to the standard variants, there are special sensors for uses such as ATEX areas or for oxygen applications.
A wide range of process connections and electrical connections offer a high degree of flexibility in a wide range of applications.

PT0.25R-1001-IOL-H1141| 02/21/2025 18-13 | technical changes reserved

## Technical data

| | |
|---|---|
| Switch point: | (Min. + 0.005 × range)…100 % of full scale |
| Release point(s) | Min. up to (SP - 0.005 × range) |
| Switching cycles | ≥ 100 mil. |
| Resolution | <± 0.1 % FS |
| Accuracy LHR | ± 1.2 % FS BSL |
| **IO-Link** | |
| IO-Link specification | V 1.1 |
| Transmission physics | corresponds to 3-wire physics (PHY2) |
| Transmission rate | COM 2/38.4 kbps |
| Frame type | 2.2 |
| Programming | FDT/DTM |
| **Programming** | |
| Programming options | Offset; filter; switching points; hysteresis/ filter function, NC/NO; min./max. pressure values, pressure peak counter; operating hours counter |
| **Mechanical data** | |
| Housing material | Stainless-steel/Plastic, 1.4404 (AISI 316L)/polyarylamide 50 % GF UL 94 V-0 |
| Process connection | G 1/4" female thread (front sealing) |
| Pressure connection material | Stainless steel 1.4404 (AISI 316L) |
| Material pressure transducer | Ceramic $Al_2O_3$ |
| Wrench size pressure connection / coupling nut | 24 |
| Max. tightening torque of housing nut | 20 Nm |
| Electrical connection | Connector, M12 × 1 |
| Protection class | IP67 |
| **Environmental conditions** | |
| Ambient temperature | -30…+85 °C |
| Storage temperature | -50…+100 °C |
| Shock resistance | 100 g, 11 ms, half sinusoidal curve, all 6 directions, free fall from 1 m onto concrete (6x) acc. to IEC 68-2-27 |
| Vibration resistance | 20 g, 15…2000 Hz, 15…25 Hz with amplitude ± 15 mm, 1 octave/minute in all 3 directions, 50 continuous loads |
| **Tests/approvals** | |
| UL registration number | E302799 |
| **Reference conditions acc. to IEC 61298-1** | |
| Temperature | 15…+25 °C |

PT0.25R-1001-IOL-H1141| 02/21/2025 18-13 | technical changes reserved

## Technical data

| | |
|---|---|
| Atmospheric pressure | 860…1060 hPa abs. |
| Humidity | 45…75 % rel. |
| Auxiliary power | 24 VDC |
| **Temperature behaviour** | |
| MTTF | 1200 years acc. to SN 29500 (Ed. 99) 40 °C |
| Included in delivery | FKM O-ring special (1 pc) |

## Technical data

| | |
|---|---|
| Type | PT0.25R-1001-IOL-H1141 |
| ID | 100024337 |
| Pressure type | Relative pressure |
| Pressure range | 0…0.25 bar |
| | 0…3.63 psi |
| | 0…0.025 MPa |
| Admissible overpressure | ≤ 3 bar |
| Burst pressure | ≥ 3 bar |
| Response time | < 2 ms, typ. 1 ms |
| Long-term stability | 0.25 % FS, according to IEC EN 60770-1 |
| **Power supply** | |
| Operating voltage $U_B$ | 18…33 VDC |
| | In IO-Link mode |
| | 9…33 VDC |
| | In SIO mode |
| Short-circuit/reverse polarity protection | yes / yes |
| Protection class | IP67 |
| Insulation class | III |
| Insulation voltage | 500 VDC |
| **Outputs** | |
| Output 1 | Switching output or IO-Link mode |
| Output 2 | Switching output |
| **Switching output** | |
| Communication protocol | IO-Link |
| Output function | NO/NC, PNP/NPN |
| Switching current | ≤ 100 mA |
| Switching frequency | ≤ 100 Hz |
| Switching point distance | ≥ 0.5 % |
| Switch point: | (Min. + 0.005 × range)…100 % of full scale |

PT0.25R-1001-IOL-H1141| 02/21/2025 18-13 | technical changes reserved

## Technical data

| | |
|---|---|
| Release point(s) | Min. up to (SP - 0.005 × range) |
| Switching cycles | ≥ 100 mil. |
| Switch point SP1 | Factory setting: 25 % of measuring range end value |
| Release point rP1 | Factory setting: 23 % of measuring range end value |
| Switching point SP2 | Factory setting: 75 % of measuring range end value |
| Release point rP2 | Factory setting: 73 % of measuring range end value |
| Resolution | <± 0.1 % FS |
| Accuracy LHR | ± 1.2 % FS BSL |
| **IO-Link** | |
| IO-Link specification | V 1.1 |
| Programming | FDT/DTM |
| Transmission physics | corresponds to 3-wire physics (PHY2) |
| Transmission rate | COM 2/38.4 kbps |
| Frame type | 2.2 |
| **Temperature behaviour** | |
| Medium temperature | -40…+125 °C |
| Temperature coefficient | ± 0.2 % of full scale/10 K |
| **Environmental conditions** | |
| Ambient temperature | -30…+85 °C |
| Storage temperature | -50…+100 °C |
| Vibration resistance | 20 g, 15…2000 Hz, 15…25 Hz with amplitude ± 15 mm, 1 octave/minute in all 3 directions, 50 continuous loads, acc. to IEC 68-2-6 |
| Shock resistance | 100 g, 11 ms, half sinusoidal curve, all 6 directions, free fall from 1 m onto concrete (6x) acc. to IEC 68-2-27 |
| **Mechanical data** | |
| Housing material | Stainless-steel/Plastic, 1.4404 (AISI 316L)/polyarylamide 50 % GF UL 94 V-0 |
| Pressure connection material | Stainless steel 1.4404 (AISI 316L) |
| Material pressure transducer | Ceramic $Al_2O_3$ |
| Process connection | G 1/4" female thread (front sealing) |
| Wrench size pressure connection / coupling nut | 24 |
| Electrical connection | Connector, M12 × 1 |
| Max. tightening torque of housing nut | 20 Nm |

PT0.25R-1001-IOL-H1141| 02/21/2025 18-13 | technical changes reserved

## Technical data

| | |
|---|---|
| **Reference conditions acc. to IEC 61298-1** | |
| Temperature | 15…+25 °C |
| Atmospheric pressure | 860…1060 hPa abs. |
| Humidity | 45…75 % rel. |
| Auxiliary power | 24 VDC |
| **Programming** | |
| Programming options | Offset; filter; switching points; hysteresis/ filter function, NC/NO; min./max. pressure values, pressure peak counter; operating hours counter |
| **Tests/approvals** | |
| Approvals | cULus |
| UL registration number | E302799 |
| MTTF | 1200 years acc. to SN 29500 (Ed. 99) 40 °C |
| Included in delivery | FKM O-ring special (1 pc) |

PT0.25R-1001-IOL-H1141| 02/21/2025 18-13 | technical changes reserved