Smart Power Supply Module in IP67
24…28 VDC Output Voltage
3-Phase, 25-A Output Current, IO-Link Interface
PSU67-3P-1S-2L-24250-IOL-F

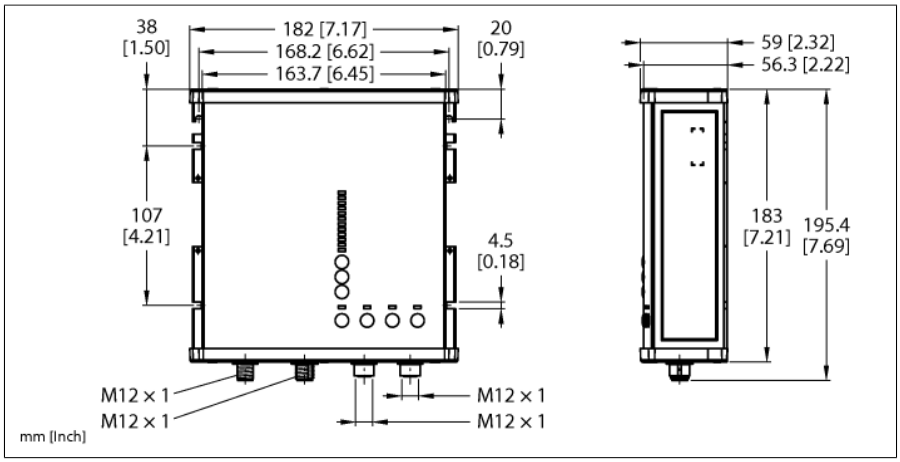

Type	PSU67-3P-1S-2L-24250-IOL-F
ID	100025929

Nominal voltage	Universal voltage supply unit
Operating voltage	320…550 VAC
Frequency	50…60 Hz
Power dissipation, typical	≤ 23 W
PFC	0.95
Efficiency	95 %
External fuse	B-6A, C-6A
Internal fuse	4 separate eFuses

Nominal output voltage	24 V
Nominal current	25 A
Output power	600 W (up to +45 °C) 500 W (up to +55 °C) 350 W (up to +70 °C) 1000 W (+55 °C, up to max. 5 sec.) 700 W (+70 °C, up to max. 5 sec.)

Parallel mode	no
Ripple	100 mV
Short-circuit behaviour	Current limiting

Approval	CE cULus RoHS SEMI F47

Protection class	IP67
Ambient temperature	-25…+70 °C
Storage temperature	-40…+85 °C
Dimensions	183 x 180.6 x 58.7 mm
Weight	1605 g

- Broad temperature range
- Status LED
- High efficiency, > 95 %
- 3-phase AC input, M12 S-coded
- Current-limited outputs, 2 × M12 L-coded
- Protection by 4 separate eFuses
- IO-Link interface for checking and parameterization
- LED interface and control knobs for maximum flexibility

Input assignment M12 S-coded (XD1)

1 = L1
2 = L2
3 = L3
4 = PE

Output assignment M12 L-coded (OUT1&2 — XD2 | OUT 3&4 — XD3)

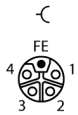

1 = 24 VDC (V1)
2 = GND (V2)
3 = GND (V1)
4 = 24 VDC (V2)
FE

M12 IO-Link Assignment

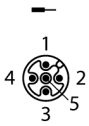

1 = 24 VDC
2 = n.c.
3 = GND
4 = C/Q (IO-Link)
5 = n.c.

Edition • 2025-02-28T14:39:28+01:00