PS510-16V-04-LI2UPN8-H1141/X
Pressure Sensor – Relative Pressure: -1…16 Bar

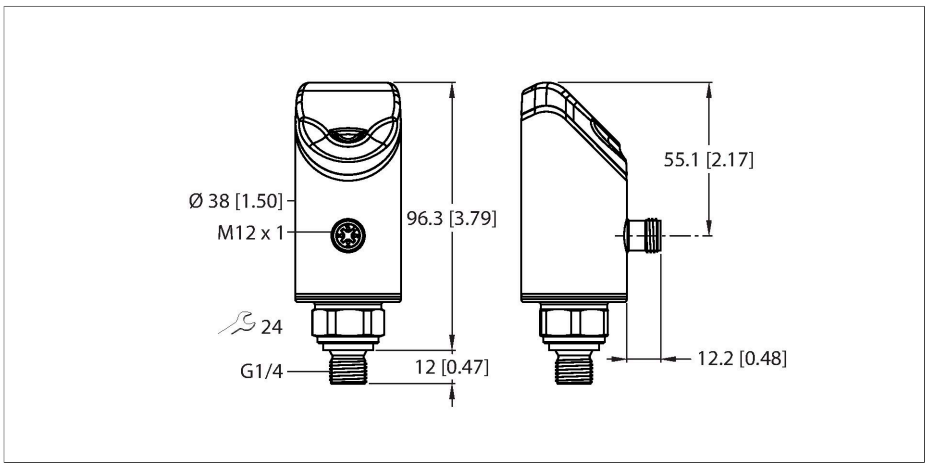



Technical data

Type	PS510-16V-04-LI2UPN8-H1141/X
ID	100028433
Medium temperature	-40…+80 °C
Pressure range	
Pressure type	Relative pressure
Pressure range	-1…16 bar
	-14.5…232.06 psi
	-0.1…1.6 MPa
Admissible overpressure	≤ 100 bar
Burst pressure	≥ 500 bar
Response time	Typically 1 ms (max. 2.5 ms)
Long-term stability	± 0.2 % FS, /annum
Operating voltage U_B	18…33 VDC
Short-circuit/reverse polarity protection	yes, cyclic / yes (voltage supply)
Insulation class	III
Outputs	
Output 1	Switching output or IO-Link mode
Output 2	Analog or switching output
Switching output	
Communication protocol	IO-Link
Output function	NO/NC, PNP/NPN
Rated operational current	0.25 A
Switching frequency	≤ 300 Hz
Switching point distance	≥ 0.5 %

Features

- 4-digit, 2-color (red/green), 12-segment display, rotatable by 180°
- Housing is rotatable after mounting the process connection
- Metal measuring cell
- Pressure peak orifice
- Pressure range -1…16 bar relative
- 18…33 VDC
- NO/NC contact, PNP/NPN output, analog output (current/voltage), IO-Link SSP4.1.1
- Process connection G1/4" male thread
- Connector device, M12 × 1

Wiring diagram

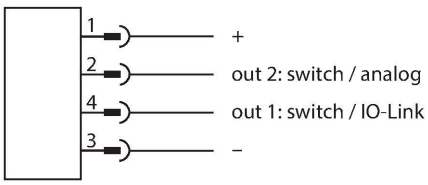

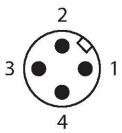

Functional principle

The pressure sensors from the P510 product series operate with fully welded metal measuring cells. As a result of the pressure acting on the metal substrate, a signal that

PS510-16V-04-LI2UPN8-H1141/X 03/25/2026 21-33 | technical changes reserved

Technical data

Switch point:	(Min. + 0.005 × range)…100 % of full scale
Release point(s)	min. up to (SP - 0.005 × range)
Switching cycles	≥ 100 mil.
Analog output	
Current output	4…20 mA
Voltage output	0…10 V
IO-Link	
IO-Link specification	V 1.1
Transmission physics	corresponds to 3-wire physics (PHY2)
Transmission rate	COM 2/38.4 kbps
Process data width	32 bit
Measured value information	24 bit
Switching point information	3 bit
Frame type	2.2
Programming	FDT/DTM
Profile support	Smart Sensor Profile (SSP4.1.1)
Included in the SIDI GSDML	In preparation
Programming	
Programming options	start/end value analog output; switch/ release points; PNP/NPN; NO/NC contact; hysteresis/window function; damping; pressure unit; peak pressure memory
Mechanical data	
Housing material	Stainless-steel/Plastic, 1.4404 (AISI 316L)/Grilamid TR90 UV/Elastollan C 65 A 15 HPM 000/Ultramid A3X2G5
Process connection	G 1/4" male thread
Wrench size pressure connection / coupling nut	24
Max. tightening torque of housing nut	35 Nm
Electrical connection	Connector, M12 × 1
Protection class	IP66 IP67 IP69K
Environmental conditions	
Ambient temperature	-40…+80 °C
Storage temperature	-40…+80 °C
Shock resistance	50 g (11 ms) EN 60068-2-27
EMV	EN 61000-4-2 ESD:4 kV CD / 8 kV AD EN 61000-4-3 HF radiated: 15 V/m

is proportional to the pressure is generated and processed electronically. Depending on the sensor variant, the processed signal is available either as a switching or an analog output with an accuracy of 0.25 % of full scale. The rotatable sensor body and a variety of process connections guarantee flexible process integration.

PS510-16V-04-LI2UPN8-H1141/X| 03/25/2026 21-33 | technical changes reserved

Technical data

	EN 61000-4-4 Burst: 2 kV EN 61000-4-6 HF cable bound: 10 V EN 61000-6-2 0.5 kV, 42 Ω EN 61326-2-3
Tests/approvals	
UL registration number	E183243
Reference conditions acc. to IEC 61298-1	
Temperature	-40…+85 °C
Atmospheric pressure	689…1300 hPa abs.
Humidity	10…95 % rel.
Auxiliary power	24 VDC
Displays/Operating elements	
Display	4-digit 12-segment display, rotatable by 180°, red or green
Switching state	2 × LEDs, Yellow
Unit display	5 x LEDs green (bar, psi, kPa, MPa, misc)
Temperature behaviour	
Temperature coefficient range TK_s	± 0.11 % of full scale/10 K
Temperature coefficient zero point TK_0	± 0.11 % of full scale/10 K
MTTF	100 years acc. to SN 29500 (Ed. 99) 40 °C
Included in delivery	FKM 90 O-ring, 1 piece

Technical data

Type	PS510-16V-04-LI2UPN8-H1141/X
ID	100028433
Pressure range	
Pressure type	Relative pressure
Pressure range	-1…16 bar
	-14.5…232.06 psi
	-0.1…1.6 MPa
Admissible overpressure	≤ 100 bar
Burst pressure	≥ 500 bar
Response time	Typically 1 ms (max. 2.5 ms)
Long-term stability	0.2 % FS, /annum
Operating voltage U_B	18…33 VDC
Voltage drop at I_e	≤ 2 V
Short-circuit/reverse polarity protection	yes, cyclic / yes (voltage supply)
Protection class	IP66 IP67

PS510-16V-04-LI2UPN8-H1141/X 03/25/2026 21-33 | technical changes reserved

Technical data

	IP69K
Insulation class	III
Outputs	
Output 1	Switching output or IO-Link mode
Output 2	Analog or switching output
Switching output	
Communication protocol	IO-Link
Output function	NO/NC, PNP/NPN
Rated operational current	0.25 A
Switching frequency	≤ 300 Hz
Switching point distance	≥ 0.5 %
Switch point:	(Min. + 0.005 × range)…100 % of full scale
Release point(s)	min. up to (SP - 0.005 × range)
Switching cycles	≥ 100 mil.
Analog output	
Current output	4…20 mA
Voltage output	0…10 V
IO-Link	
IO-Link specification	V 1.1
Programming	FDT/DTM
Transmission physics	corresponds to 3-wire physics (PHY2)
Transmission rate	COM 2/38.4 kbps
Process data width	32 bit
Measured value information	24 bit
Switchpoint information	3 bit
Frame type	2.2
Profile support	Smart Sensor Profile (SSP4.1.1)
Included in the SIDI GSDML	In preparation
Temperature behaviour	
Medium temperature	-40…+80 °C
Temperature coefficient zero point TK_0	± 0.11 % of full scale/10 K
Temperature coefficient range TK_s	± 0.11 % of full scale/10 K
Environmental conditions	
Ambient temperature	-40…+80 °C
Storage temperature	-40…+80 °C
Shock resistance	50 g (11 ms) EN 60068-2-27
EMV	EN 61000-4-2 ESD:4 kV CD / 8 kV AD EN 61000-4-3 HF radiated: 15 V/m

PS510-16V-04-LI2UPN8-H1141/X 03/25/2026 21-33 | technical changes reserved

Technical data

	EN 61000-4-4 Burst: 2 kV EN 61000-4-6 HF cable bound: 10 V EN 61000-6-2 0.5 kV, 42 Ω EN 61326-2-3
Mechanical data	
Housing material	Stainless-steel/Plastic, 1.4404 (AISI 316L)/Grilamid TR90 UV/Elastollan C 65 A 15 HPM 000/Ultramid A3X2G5
Process connection	G 1/4" male thread
Wrench size pressure connection / coupling nut	24
Electrical connection	Connector, M12 × 1
Max. tightening torque of housing nut	35 Nm
Reference conditions acc. to IEC 61298-1	
Temperature	-40…+85 °C
Atmospheric pressure	689…1300 hPa abs.
Humidity	10…95 % rel.
Auxiliary power	24 VDC
Displays/Operating elements	
Display	4-digit 12-segment display, rotatable by 180°, red or green
Switching state	2 × LEDs, Yellow
Unit display	5 x LEDs green (bar, psi, kPa, MPa, misc)
Programming	
Programming options	start/end value analog output; switch/ release points; PNP/NPN; NO/NC contact; hysteresis/window function; damping; pressure unit; peak pressure memory
Tests/approvals	
Approvals	cULus
UL registration number	E183243
MTTF	100 years acc. to SN 29500 (Ed. 99) 40 °C
Included in delivery	FKM 90 O-ring, 1 piece

PS510-16V-04-LI2UPN8-H1141/X 03/25/2026 21-33 | technical changes reserved

IO-Link process data image

Bit	0	1	2	3	4	5	6	7	8	9	10	11	12	13	14	15
Byte n	Switching (physical OUT 1)	Switching (physical OUT 2)	Fault state						8-bit scale (pressure)							
Bit	16	17	18	19	20	21	22	23	24	25	26	27	28	29	30	31
Byte n+1	16-bit process value															

PS510-16V-04-LI2UPN8-H1141/X| 03/25/2026 21-33 | technical changes reserved