Accessories
Thermowell
For Temperature Sensors
THW-6-N1/2-A4-L030

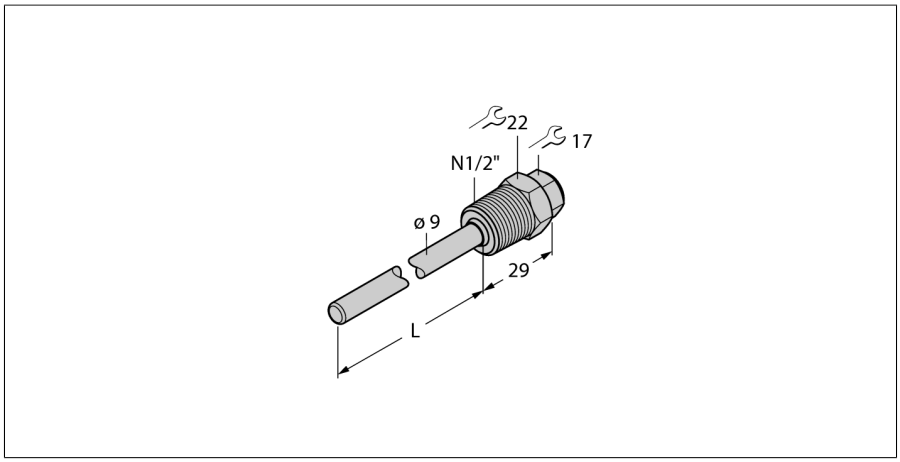

- Protective tube for mounting temperature sensors
- Sensor diameter 6 mm
- Process connection 1/2" NPT male thread
- Immersion depth 30 mm

General description

Thermowells protect the probes against aggressive substances and high pressures. The probes do not come into contact with any media. They can be replaced without interrupting the process.

Type	THW-6-N1/2-A4-L030
ID	100028838

Temperature range	
Measuring range	-50…350 °C
	-58…662 °F
Immersion depth L	30 mm
Outer diameter	9 mm

Mechanical data	
Housing material	Stainless steel
Internal diameter	6.2 mm
Process connection	1/2″ NPT male thread
Process Pressure	400 bar
Max. tightening torque of housing nut	100 Nm

Edition • 2025-02-28T14:40:06+01:00