FS101-300L-00-2UPN8-H1141
Flow Sensor

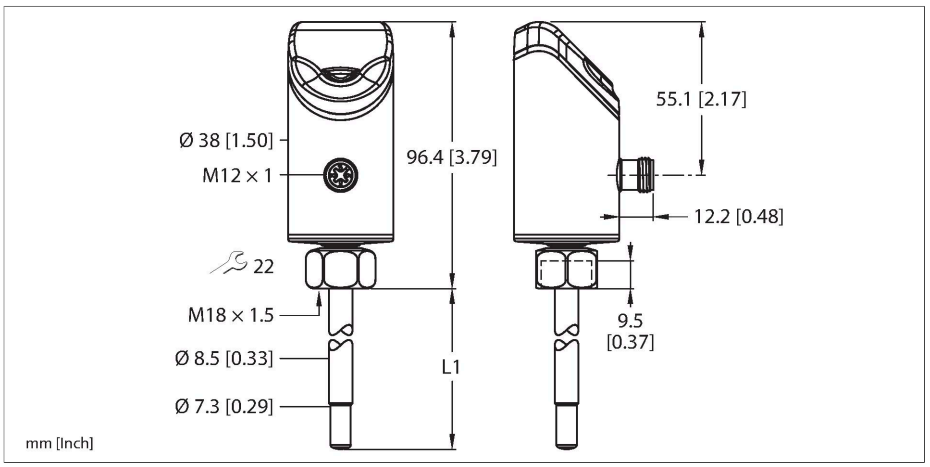

Technical data

Type	FS101-300L-00-2UPN8-H1141
ID	100030864
Remark to product	Installation exclusively using Turck process adaptors: FAA-xx-xxxx-series screw-in adaptors; FAF-xx-xxxx-series welding adaptors. Adaptors must be ordered separately as accessories.
Medium temperature	-25…+85 °C
Application area	
Mounting	Immersion sensor
Application area	liquids
Bar length (L1)	45 mm
Minimum immersion depth	≥ 15 mm
Process Pressure	300 bar
Flow Monitoring	
Standard flow range	3…300 cm/s
	Any axial alignment of the sensor rod in the medium
Extended flow range	1…300 cm/s
Extended flow range comment	Directed Inflow to Punch Mark ±20 °
Switching point accuracy	1…30 cm/s; For Water 3…300 cm/s
Reproducibility	1…5 cm/s ; For Water 3…100 cm/s; 10…80 °C
Response time T09	6 s
Response time T05	3 s
Temperature drift	0.5 cm/s × 1/K

Features

- Sensor housing material 1.4404 (316L)
- Media-contacting material 1.4571 (316Ti)
- Bar length 45 mm
- 4-digit 12-segment display, rotatable by 180°
- Flow monitoring for liquid media
- Protection classes IP66, IP67 and IP69K
- Adjustment of flow speed via teach function
- 17…33 VDC
- NO/NC contact, PNP/NPN output, IO-Link
- Connector, M12 × 1

Wiring diagram

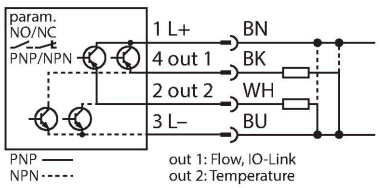

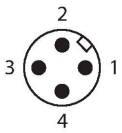

Functional principle

The flow sensor functions according to the calorimetric principle. The distinctive feature of this principle is that the flow rate correlates directly to the thermal loss of energy in the probe. The increased loss of energy is therefore a direct measure of an increased flow rate.

FS101-300L-00-2UPN8-H1141| 02/21/2025 17-50 | technical changes reserved

Technical data

Temperature gradient	≤ 300 K/min
Hysteresis	3…25 % of the switching point
Temperature monitoring	
Measuring range	-25…85 °C
Switching point accuracy	± 2 K; for water >3 cm/s; 20…70 °C
Reproducibility	≤ 0.5 K
Resolution	0.1 K
Response time T09	12 s
Response time T05	3 s
Electrical data	
Operating voltage U_B	17…33 VDC
Short-circuit/reverse polarity protection	yes, cyclic / yes (voltage supply)
Power consumption	≤ 3 W
Voltage drop	≤ 2 VDC
Continuous current carrying capacity of the DC switching output	250 mA
Overload protection	Yes
Insulation class	III
Standby delay time	30 s
Outputs	
Output 1	Flow: Switching output or IO-Link
Output 2	Temperature: Switching output
Communication protocol	IO-Link
Output function	NO/NC programmable, PNP/NPN
IO-Link	
IO-Link specification	V 1.1
IO-Link port type	Class A
Transmission rate	COM 2 (38.4 kBaud)
Process data width	64 bit
Measured value information	48 bit
Switching point information	4 bit
Frame type	2.2
Minimum cycle time	6 ms
Function pin 4	IO-Link
Function Pin 2	DI
Maximum cable length	20 m
Profile support	Smart Sensor Profile (SSP4.1.2)
Included in the SIDI GSDML	In preparation

FS101-300L-00-2UPN8-H1141| 02/21/2025 17-50 | technical changes reserved

Technical data

Programming	
Programming options	Automatic switching logic recognition, easy switchpoint adjustment via touchpads
Mechanical data	
Housing material	Stainless-steel/Plastic, 1.4404 (AISI 316L)/Grilamid TR90 UV/Elastollan C 65 A 15 HPM 000/Ultramid A3X2G5
Adapter material	Stainless Steel 1.4571 (316Ti)
Materials (contact with media)	Stainless steel 1.4571 (AISI 316Ti), FKM O-ring, AFM flat seal
Process connection sensor	M18 x 1.5 female thread
Electrical connection	Connector, M12 × 1
Protection class	IP66 IP67 IP69K
Electromagnetic compatibility (EMC)	DIN EN 60947-5-9: 2007
Environmental conditions	
Ambient temperature	-40…+80 °C
	(UL: -25…+80 °C)
Storage temperature	-40…+80 °C
Shock resistance	50 g (11 ms) EN 60068-2-27
Vibration resistance	20 g (55…2000 Hz)DIN EN 60068-2-6
Tests/approvals	
Approvals	CE cULus
UL registration number	E516036
Display	LED display functions for status of supply voltage, switching states, units and teach processes. Process display via 12-segment display.
MTTF	120 years acc. to SN 29500 (Ed. 99) 40 °C

FS101-300L-00-2UPN8-H1141| 02/21/2025 17-50 | technical changes reserved

LED display

LED	Color	Status	Description
PWR	Green	On	Operating voltage applied Device is operational
		Flashing	Operating voltage applied IO-Link communication active (inverted flash with T on 900 ms and T off 100 ms)
FLT	Red	On	Error displayed (For error pattern in combination with LEDs see manual)
		Off	No errors displayed
LOC	Yellow	On	Device locked
		Off	Device unlocked
		Flashing	Locking/unlocking process active
FLOW	Yellow	On	NO: Flow switching point exceeded (output "high") NC: Flow below minimum switching point (output "high")
		Off	NO: Flow below minimum switching point (output "low") NC: Flow switching point exceeded (output "low")
		Flashing	Teach mode/display of diagnostic data (see manual for specification)
%	Yellow	On	Display: max. flow in percent (%)
°C	Yellow	On	Display: temperature in ° Celsius
°F	Yellow	On	Display: temperature in ° Fahrenheit
TEMP	Yellow	On	NO: Temperature switchpoint exceeded (output "high") NC: Temperature below minimum switchpoint (output "high")
		Off	NO: Temperature below minimum switchpoint (output "low") NC: Temperature switchpoint exceeded (output "low")
		Flashing	Teach mode/display of diagnostic data (see manual for specification)

For a detailed description of the display patterns and flashing codes see manual/instructions for use FS101 — Compact Flow Sensors (100030514.pdf)

IO-Link process data image

Bit	0	1	2	3	4	5	6	7	8	9	10	11	12	13	14	15
Byte n	Switch (Temp-Physical)	Switch (Temp-Virtual)							8-bit scale (TEMP)							
Bit	16	17	18	19	20	21	22	23	24	25	26	27	28	29	30	31
Byte n+1	16-bit process value (TEMP)															
Bit	32	33	34	35	36	37	38	39	40	41	42	43	44	45	46	47
Byte n+2	Switch (Flow-Physical)	Switch (Flow-Virtual)							8-bit scale (FLOW)							
Bit	48	49	50	51	52	53	54	55	56	57	58	59	60	61	62	63
Byte n+3	16-bit process value (FLOW)															

FS101-300L-00-2UPN8-H1141| 02/21/2025 17-50 | technical changes reserved