EFSBG-12.1200.4-0.5
Actuator and Sensor Receptacle – Front Mount

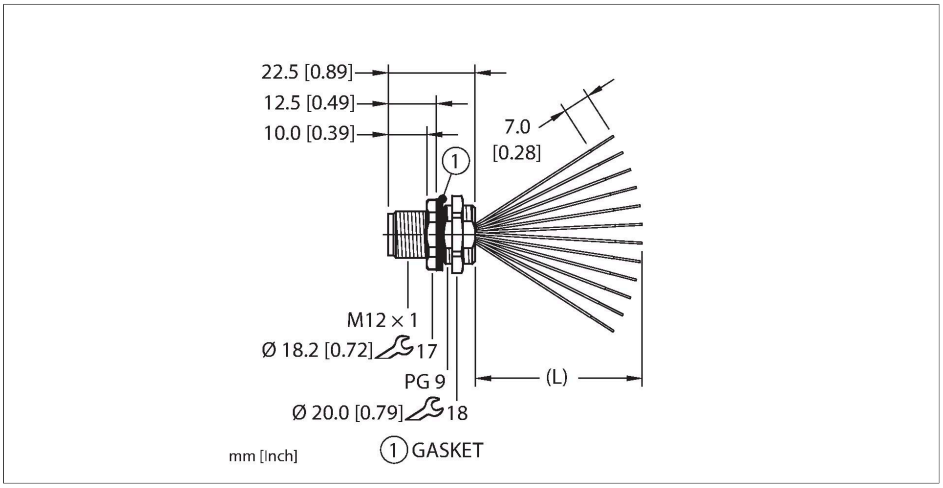

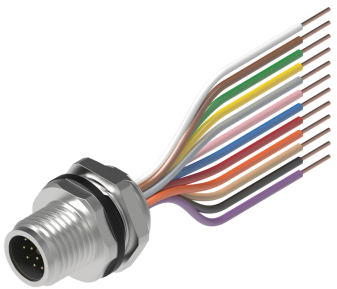

Technical data

Type	EFSBG-12.1200.4-0.5
ID	100034252
Replaces	FS 12-x
Connector A	Male, M12 × 1, A-code
Design specification	Acc. to IEC 61076-2-101
Number of contacts	12
Contacts	Brass, CuZn, Gold-plated
Contact carriers	Plastic, TPU, Black
Housing material/finish	Brass, CuZn, Nickel-plated
Tightening torque (range)	0.4 … 1.8 Nm (note max. torque of mating connector!)
Mounting orientation	Front mount
Panel seal	Gasket, NBR
Mounting thread	PG9
Locknut	Brass, CuZn, Nickel-plated
Receptacle mounting torque	2.5…6.8 Nm
Mechanical life	> 100 Mating cycles
Pollution degree	3
Protection class (When coupled)	IP67, IP68, IP69, IP69K
	NEMA: 1, 3, 4, 6P, 12
Conductor data	
Total number of conductors	12
Length (L)	0.5 m, (+50mm or 4% of length/-0.0, Whichever is greater)

Features

- M12, Male, Receptacle, Front mount, 12-pin
- Mounting thread: PG9

Contact assignment

Connector A

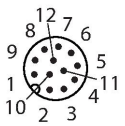

Circuit Diagram

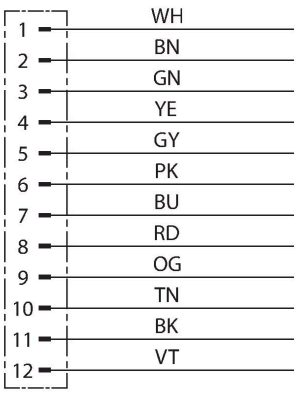

EFSBG-12.1200.4-0.5| 03/13/2026 15-25 | technical changes reserved

Technical data

Conductor material	TC (tinned copper)
Conductor insulation material	PVC
Conductor size	24 AWG [Similar to 0.25 mm²]
Conductor colors	WH, BN, GN, YE, GY, PK, BU, RD, OG, TN, BK, VT
Electrical properties at +20 °C	
Rated voltage	30 V_{AC}/42 V_{DC}
Current	2 A
Mechanical and chemical properties	
Ambient temperature range (static)	-40…+105 °C
Approvals	UL 2238 CSA C22.2 No. 182.3 CE UKCA RoHS
Note	
	- We reserve the right to make technical alterations without prior notice.

Mounting hole - Through

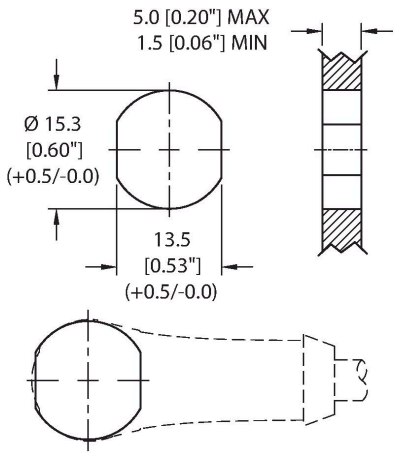

Mounting hole - Threaded

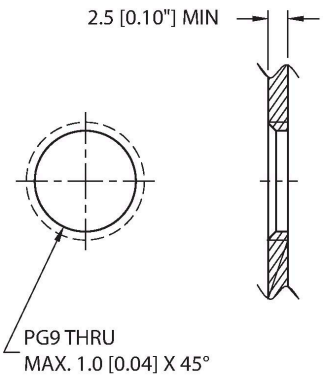

Front panel mounting

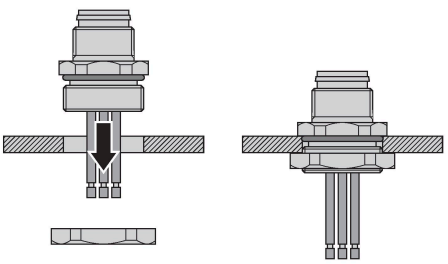

EFSBG-12.1200.4-0.5| 03/13/2026 15-25 | technical changes reserved

Accessories

DECAL,9-CLRS,RECEPT+BOXES,EURO(QTY1) **100008955**

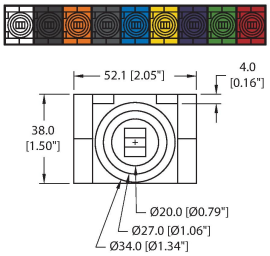

1 decal sticker containing 9 different color sets of 11 decals to color code a sensor, junction block port, cable end, or receptacle. 5ct 4x9mm rectangles, 4ct 8x19mm rectangles, 1ct 27mm ID ring, 1ct 20mm ID ring.

Accessories

LOCKNUT-PG9-BRASS-(10/BAG) **100016624**

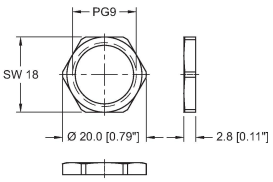

Locknut, PG9, Brass, Nickel-plated, 10 per bag

M12-GASKET-PG9,M16,1/4NPT-(10/BAG) **100015009**

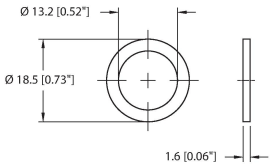

Gasket, Black NBR, Fits PG9, M16 and 1/4NPT mounting threads, 10 per bag

EFSBG-12.1200.4-0.5| 03/13/2026 15-25 | technical changes reserved