WIM224-UNTL-IOL-0.3-RS4
Magnetic Inductive Linear Position Sensor – For Analog Monitoring of Pneumatic Cylinders

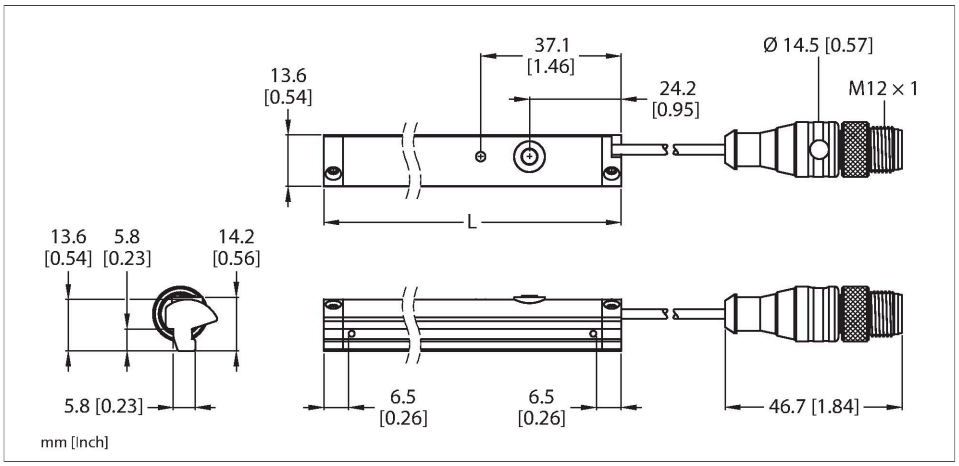



Technical data

Type	WIM224-UNTL-IOL-0.3-RS4
ID	100034312
Remark to product	1 mm corresponds to 128 values in the IO-Link process data
Measuring principle	Magnetic
General data	
Measuring range	224 mm
Resolution	15 bit
Repeatability	≤ 0.06 % of measuring range |A — B|
	With non-rotatable piston rod and at 25 °C
Linearity deviation	< 0.3 mm
Temperature drift	≤ ± 0.006 %/K
Electrical data	
Operating voltage U_B	15…30 VDC
Ripple U_{ss}	≤ 10 % U_{Bmax}
No-load current	≤ 25 mA
Isolation test voltage	0.5 kV
Short-circuit protection	yes
Wire break/reverse polarity protection	yes/Complete
Communication protocol	IO-Link
Output function	4-wire
IO-Link	
IO-Link specification	V 1.1

Features

- Plastic, PA66-GF25
- For direct mounting on pneumatic T-groove cylinders
- Measuring range: 224 mm
- 4-wire, 15…30 VDC
- IO-Link 1.1
- COM2
- Teachable via IO-Link or button
- Cable with M12 × 1 male connector

Wiring diagram

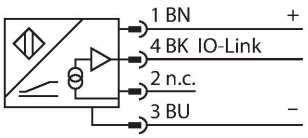

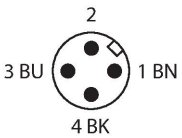

Functional principle

The linear position sensors operate according to the Hall principle and provide an output signal proportional to the position of the piston rod of a pneumatic cylinder. This signal can be used to accomplish control tasks. The polarity of the magnet has no effect on the output signal. The

WIM224-UNTL-IOL-0.3-RS4| 02/21/2025 14-49 | technical changes reserved

Technical data

IO-Link port type	Class A
Minimum cycle time	2.3 ms
Mechanical data	
Design	Rectangular, UNTL
Dimensions	237 x 13.6 x 14.2 mm
Housing material	Plastic, PA66-GF25
Tightening torque fixing screw	0.25 Nm
Electrical connection	Cable with connector, M12 × 1
Cable quality	Ø 2.6 mm, Black, TPE, 0.3 m
	Halogen free, flame retardant acc. to VDE, below 0 °C stationary mounting of cable
Core cross-section	4 x 0.25 mm^2
Environmental conditions	
Ambient temperature	-20…+70 °C
Vibration resistance	55 Hz (1 mm)
Shock resistance	30 g (11 ms)
Protection class	IP67
Display magnetic-field status	LED, yellow

rugged sensors deliver optimal repeatability, resolution and linearity and offer a high level of electromagnetic compatibility, as well as a wide temperature range.

WIM224-UNTL-IOL-0.3-RS4| 02/21/2025 14-49 | technical changes reserved