EKRB-EKRB-B5.5GD-GC04-1
Actuator and Sensor Cable – Extension Cable

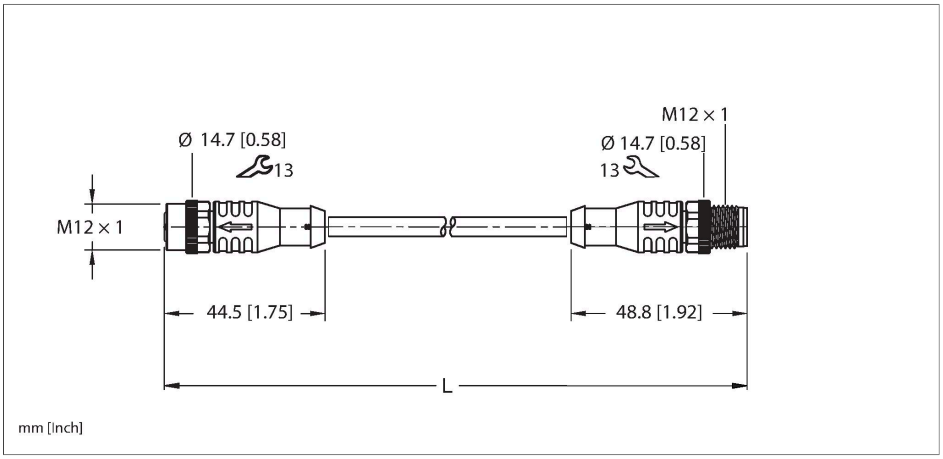



Technische Daten

Type	EKRB-EKRB-B5.5GD-GC04-1
ID	100044778
Replaces	WAKW 4.5T-x-WAKW 4.5T
Connector A	Female, M12 × 1, Straight, B-code
Design specification	Acc. to IEC 61076-2-101
Number of contacts	5
Contacts	Bronze, CuSn, Gold-plated
Contact carriers	Plastic, Nylon or TPU, Black
Connector body	Plastic, TPU, Black
Coupling nut	Brass, CuZn, Nickel-plated
Connector seal	O-ring, Plastic, FKM/FPM
Tightening torque (range)	0.4 … 1.8 Nm (note max. torque of mating connector!)
Mechanical life	> 100 Mating cycles
Pollution degree	3
Protection class (When coupled)	IP67, IP68, IP69, IP69K
	NEMA: 1, 3, 4, 6P, 12
Connector B	Male, M12 × 1, Straight, B-code
Design specification	Acc. to IEC 61076-2-101
Number of contacts	5
Contacts	Bronze, CuSn, Gold-plated
Contact carriers	Plastic, Nylon or TPU, Black
Connector body	Plastic, TPU, Black
Coupling nut	Brass, CuZn, Nickel-plated
Tightening torque	0.4 … 1.8 Nm

Features

- M12, Female, Straight, 5-pin
- B-code (reverse key)
- M12, Male, Straight, 5-pin
- B-code (reverse key)
- Instrumentation Tray Cable
- Gray PVC jacket, 5X20 AWG
- Sunlight Resistant
- -40 Cold Bend Rating
- Oil Resistant
- Flame Ratings: UL 1685 FT4, UL1061, CSA FT4
- Flexlife® and C-Track Approved

Cable cross section

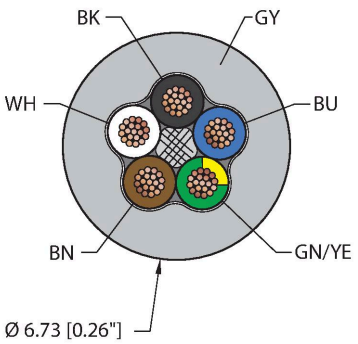

Contact assignment

Technische Daten

	(note max. torque of mating connector!)
Mechanical life	> 100 Mating cycles
Pollution degree	3
Protection class (When coupled)	IP67, IP68, IP69, IP69K
	NEMA: 1, 3, 4, 6P, 12
Cable data	
Cable ID	RF50618
Total number of conductors	5
Cable diameter	Ø 6.73 mm
Length (L)	1 m
Cable jacket	PVC, Gray
Conductor diameter	0.067 "
Conductor material	TC (tinned copper)
Conductor insulation material	PVC
Conductor size	5 x 20 AWG [Similar to 0.50 mm²]
Number of strands x O.D.	19 x 0.0073 "
Conductor colors	BN, WH, BU, BK, GNYE
Electrical properties at +20 °C	
Rated voltage	250 V_{AC}/300 V_{DC}
Current	4 A
Mechanical and chemical properties	
Bending radius (static)	≥ 5 x Ø
Bending radius (dynamic)	≥ 10 x Ø
Torsion rating	Max. 20 million
UL cold bend rating	-40 °C
Flex rating 10 x Ø	20 million cycles
	*When correctly installed at 20 °C, 50 % RH.
C-Track	Yes
Ambient temperature range (static)	-40…+105 °C
Ambient temperature range (dynamic)	5…+105 °C
Temperature range (installation)	-10…+105 °C
Approval	
Approvals	UL 2238 CSA C22.2 No. 182.3 CE UKCA RoHS

Connector A

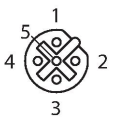

Connector B

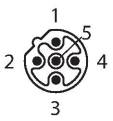

Circuit Diagram



EKRB-EKRB-B5.5GD-GC04-1| 21-02-2025 20-45 | Technische Änderungen vorbehalten

Technische Daten

Note	
	- Flex ratings may be reduced if used in extreme temperatures, exposure to certain chemicals, operating above the rated cycle speed, or operating below the rated cable bend radius.
	- We reserve the right to make technical alterations without prior notice.

Montagezubehör

M12-TORQUE-SLEEVE,YELLOW(10PACK) **A900167**



10 Pack of Yellow Torque Sleeves for the new M12 cordsets. Compatible with male, female, straight and right-angled, stainless steel and nickel-plated brass coupling nuts.

TORQUE-WRENCH-SET-M12/SW13 **A900152**

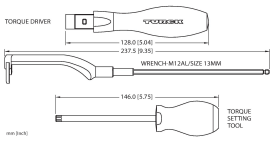

Adjustable torque driver to connect to the 13mm hex. Compatible with redesigned M12 cordsets, M12 Power, and M12 X-code. NOT Compatible with legacy M12 cordsets. Includes (1) adjustable torque driver, (1) adjustment tool, and (1) 13mm forked bit.

Montagezubehör

M12-CORDSETS-MOUNTING-CLIP-(10/BAG) **100016882**

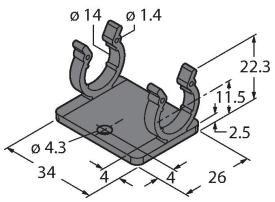

10 Pack of black mounting clips and M4x8mm mounting screws, used to secure cable to cable connection points.

EKRB-EKRB-B5.5GD-GC04-1| 21-02-2025 20-45 | Technische Änderungen vorbehalten