TW-R15-B320
HF Tag for Overhead Conveyor Applications

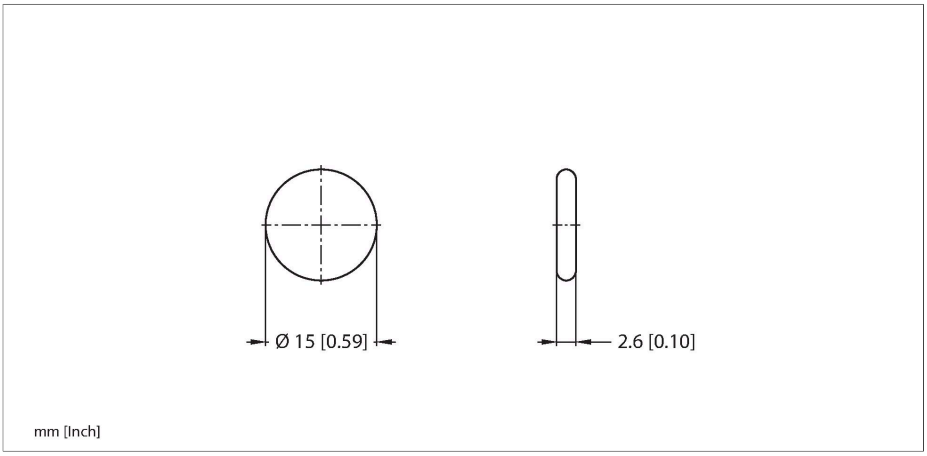



Technical data

Type	TW-R15-B320
ID	100047102
Remark to product	Extended storage temperature range
Data transfer	Inductive coupling
Technology	HF RFID
Operating frequency	13.56 MHz
Memory type	EEPROM
Chip	NXP I-Code SLIX2
Memory size	320 Byte
Memory	Read/Write
Freely usable memory	316 Byte
	Password-protected access to the data in the tag possible (requires firmware Xv98 or higher in the read/write device)
Number of read operations	unlimited
Number of write operations	10^5
Typical read time	2 ms/Byte
Typical write time	3 ms/Byte
Radio communication and protocol standards	ISO 15693 NFC Typ 5
Minimum distance to metal	10 mm
Temperature during read/write access	-25…+85 °C
Storage temperature	-40…+90 °C
Temperature outside detection range	-25…+120 °C
Design	Hard tag, 15 mm
Diameter	15 mm ± 0.2 mm

Features

- EEPROM, memory 320 byte
- Not for direct mounting on metal

Functional principle

The HF read/write devices operating at a frequency of 13.56 MHz form a transmission zone the size of which (0…500 mm) varies, depending on the combination of read/write head and tag used.
The read/write distances mentioned here only represent standard values measured under laboratory conditions, free from any influences caused by surrounding materials.
The read/write distances of tags suitable for mounting in/on metal were determined in/on metal.
Attainable distances may vary by up to 30 % due to component tolerances, mounting conditions, ambient conditions and material qualities (especially when mounted in metal). Testing of the application under real operating conditions is therefore essential, especially with on-the-fly reading and writing!

TW-R15-B320| 02/22/2025 03-07 | technical changes reserved

Technical data

Housing height	2.6 mm +0.2/-0.2 mm
Housing material	Plastic, PPS
Active area material	Plastic, PPS, White
Protection class	IP68
Packaging unit	1

TW-R15-B320| 02/22/2025 03-07 | technical changes reserved