NI60-Q80-Y1X 10M
Inductive Sensor

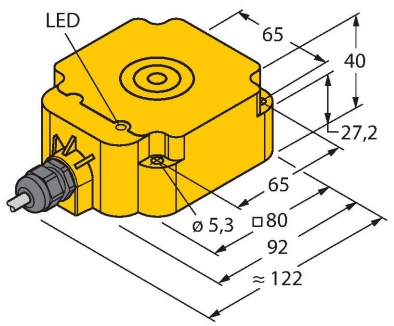

Technical data

Type	NI60-Q80-Y1X 10M
ID	1008704
General data	
Rated switching distance	60 mm
Mounting conditions	Non-flush
Secured operating distance	≤ (0.81 × Sn) mm
Correction factors	St37 = 1; Al = 0.3; stainless steel = 0.7; Ms = 0.4
Repeat accuracy	≤ 2 % of full scale
Temperature drift	≤ ±10 %
Hysteresis	1…10 %
Electrical data	
Output function	2-wire, NAMUR
Switching frequency	0.1 kHz
Voltage	Nom. 8.2 VDC
Non-actuated current consumption	≥ 2.1 mA
Actuated current consumption	≤ 1.2 mA
Approval acc. to	KEMA 02 ATEX 1090X
Internal capacitance (C_i)/inductance (L_i)	250 nF/350 µH
Device marking	Ⓔx II 2 G Ex ia IIC T6 Gb / II 1 D Ex ia IIIC T135 °C Da
	(max. U_i = 20 V, I_i = 60 mA, P_i = 200 mW)
Warning	Avoid static charging
Mechanical data	
Design	Rectangular, Q80

Features

- Rectangular, height 40 mm
- Active face on top
- Plastic, PBT-GF30-V0
- DC 2-wire, nom. 8.2 VDC
- Output acc. to DIN EN 60947-5-6 (NAMUR)
- Cable connection
- ATEX category II 2 G, Ex zone 1
- ATEX category II 1 D, Ex zone 20
- SIL2 (Low Demand Mode) acc. to IEC 61508, PL c acc. to ISO 13849-1 at HFT0
- SIL3 (All Demand Mode) acc. to IEC 61508, PL e acc. to ISO 13849-1 with redundant configuration HFT1

Wiring diagram

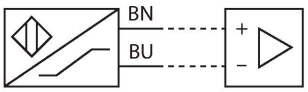

Functional principle

Inductive sensors detect metal objects contactless and wear-free. For this, they use a high-frequency electromagnetic AC field that interacts with the target. Inductive sensors generate this field via an RLC circuit with a ferrite coil.

NI60-Q80-Y1X 10M| 11/29/2022 08-36 | technical changes reserved

Technical data

Dimensions	92 x 80 x 40 mm
Housing material	Plastic, PBT-GF30-V0
Active area material	PBT-GF30-V0, black
Tightening torque fixing screw	4 Nm
Electrical connection	Cable
Cable quality	Ø 5.2 mm, Blue, LifYY, PVC, 10 m
Core cross-section	2 x 0.34 mm^2
Environmental conditions	
Ambient temperature	-25…+70 °C
Vibration resistance	55 Hz (1 mm)
Shock resistance	30 g (11 ms)
Protection class	IP67
MTTF	6198 years acc. to SN 29500 (Ed. 99) 40 °C
Switching state	LED, Yellow

NI60-Q80-Y1X 10M| 11/29/2022 08-36 | technical changes reserved

Mounting instructions

Mounting instructions/Description

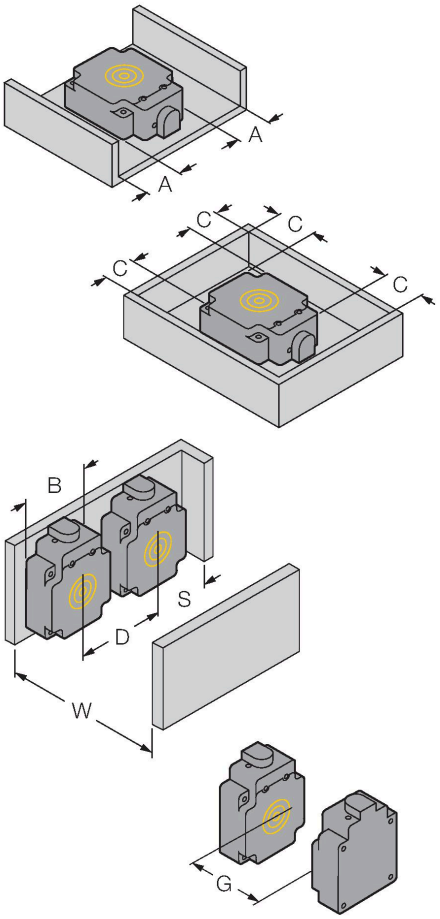

Distance D	3 x B
Distance W	3 x Sn
Distance S	1.5 x B
Distance G	6 x Sn
Distance N	2 x Sn
Distance A	1 x Sn
Distance C	2 x Sn
Width active area B	80 mm

NI60-Q80-Y1X 10M| 11/29/2022 08-36 | technical changes reserved

Instructions for use

Intended use

This device fulfills Directive 2014/34/EC and is suited for use in areas exposed to explosion hazards according to EN 60079-0:2018 and EN 60079-11:2012.Further it is suited for use in safety-related systems, including SIL2 as per IEC 61508.In order to ensure correct operation to the intended purpose it is required to observe the national regulations and directives.

For use in explosion hazardous areas conform to classification

II 2 G and II 1 D (Group II, Category 2 G, electrical equipment for gaseous atmospheres and category 1 D, electrical equipment for dust atmospheres).

Marking (see device or technical data sheet)

Ⓔx II 2 G and Ex ia IIC T6 Gb and Ⓔx II 1 D Ex ia IIIC T135 °C Da acc. to EN 60079-0, -11

Local admissible ambient temperature

-25…+70 °C

Installation/Commissioning

These devices may only be installed, connected and operated by trained and qualified staff. Qualified staff must have knowledge of protection classes, directives and regulations concerning electrical equipment designed for use in explosion hazardous areas.Please verify that the classification and the marking on the device comply with the actual application conditions.

This device is only suited for connection to approved Exi circuits according to EN 60079-0 and EN 60079-11. Please observe the maximum admissible electrical values.After connection to other circuits the sensor may no longer be used in Exi installations. When interconnected to (associated) electrical equipment, it is required to perform the "Proof of intrinsic safety" (EN60079-14).Attention! When used in safety systems, all content of the security manual must be observed.

Installation and mounting instructions

Avoid static charging of cables and plastic devices. Please only clean the device with a damp cloth. Do not install the device in a dust flow and avoid build-up of dust deposits on the device.If the devices and the cable could be subject to mechanical damage, they must be protected accordingly. They must also be shielded against strong electro-magnetic fields.The pin configuration and the electrical specifications can be taken from the device marking or the technical data sheet.

Special conditions for safe operation

avoid static charging

Service/Maintenance

Repairs are not possible. The approval expires if the device is repaired or modified by a person other than the manufacturer. The most important data from the approval are listed.

NI60-Q80-Y1X 10M| 11/29/2022 08-36 | technical changes reserved