NI20-CP40-Y1X/S100
Inductive Sensor – With Increased Temperature Range

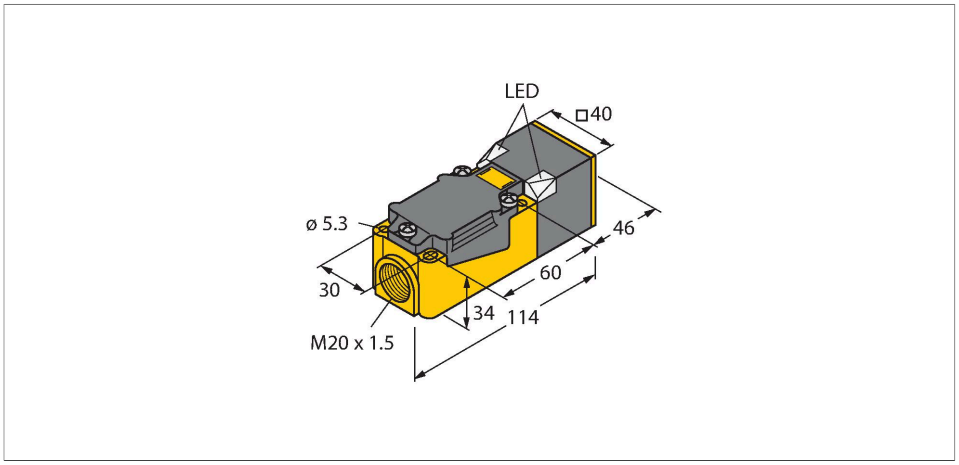

Technical data

Type	NI20-CP40-Y1X/S100
Ident. no.	1011121
Rated switching distance	20 mm
Mounting conditions	Non-flush
Secured operating distance	≤ (0.81 × Sn) mm
Correction factors	St37 = 1; Al = 0.3; stainless steel = 0.7; Ms = 0.4
Repeat accuracy	≤ 2 % of full scale
Temperature drift	≤ ± 10 %
	≤ ± 20 %, ≥ +70 °C
Hysteresis	1…10 %
Ambient temperature	-25…+100 °C
	For explosion hazardous areas see instruction leaflet
Output function	2-wire, NAMUR
Switching frequency	0.15 kHz
Voltage	Nom. 8.2 VDC
Non-actuated current consumption	≥ 2.1 mA
Actuated current consumption	≤ 1.2 mA
Approval acc. to	KEMA 02 ATEX 1090X
Internal capacitance (C_i)/inductance (L_i)	250 nF/350 µH
Device marking	Ⓔx II 2 G Ex ia IIC T6 Gb / II 1 D Ex ia IIIC T95 °C Da
	(max. U_i = 20 V, I_i = 60 mA, P_i = 200 mW)
Warning	Avoid static charging

Features

- Rectangular, height 40 mm
- Variable orientation of active face in 9 directions
- Plastic, PBT-GF30-VO
- High-luminance corner LEDs
- Optimum view of operating voltage and switching state from any position
- Temperatures up to +100 °C
- DC 2-wire, nom. 8.2 VDC
- Output acc. to DIN EN 60947-5-6 (NAMUR)
- Terminal chamber
- ATEX category II 2 G. Ex zone 1
- ATEX category II 1 D, Ex zone 20 at temperatures up to +70°C
- SIL2 according to IEC 61508

Wiring diagram

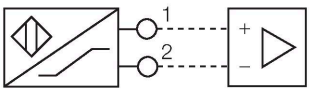

Functional principle

Inductive sensors detect metal objects contactless and wear-free. For this purpose they use a high-frequency electromagnetic AC field that interacts with the target. The sensors hosting a ferrite core coil generate the AC field through an LC resonant circuit.
Special versions are available for ambient temperatures between -60°C and +250°C.

NI20-CP40-Y1X/S100| 09/09/2020 14-35 | technical changes reserved

Technical data

Design	Rectangular, CP40
Dimensions	114 x 40 x 40 mm
Housing material	Plastic, PBT-GF30-V0, Black
Active area material	Plastic, PBT-GF30-V0, yellow
Electrical connection	Terminal chamber
Clamping ability	≤ 2.5 mm²
Vibration resistance	55 Hz (1 mm)
Shock resistance	30 g (11 ms)
Protection class	IP67
MTTF	6198 years acc. to SN 29500 (Ed. 99) 40 °C
Switching state	LED, Yellow

Mounting instructions

Mounting instructions/Description

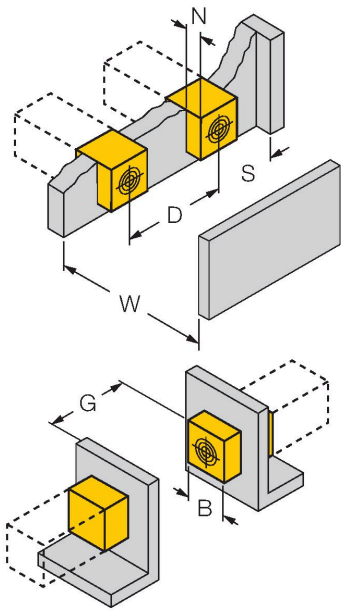

Distance D	3 x B
Distance W	3 x Sn
Distance S	1.5 x B
Distance G	6 x Sn
Distance N	1 x B
Width active area B	40 mm

NI20-CP40-Y1X/S100| 09/09/2020 14-35 | technical changes reserved

Accessories

IMX12-DI01-2S-2T-0/24VDC	7580020
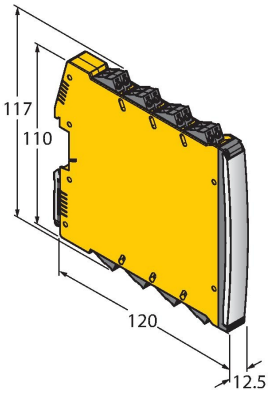	Isolating switching amplifier, 2-channel; SIL2 acc. to IEC 61508; Ex-proof version; 2 transistor outputs; input Namur signal; ON/OFF switchable monitoring of wire-break and short-circuit; toggle between NO/NC mode; signal doubling; removable screw terminals; 12.5 mm wide; 24 VDC power supply

BSS-CP40	6901318
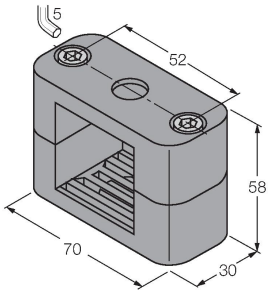	Mounting clamp for rectangular housings 40 x 40 mm; material: Polypropylene

Adjusting bar JS 025/037	69429
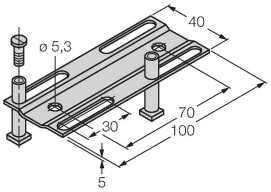	Adjusting bar for rectangular housings CK/CP40; material: VA 1.4301

Operating Instructions

Intended use

This device fulfills the directive 2014/34/EC and is suited for use in explosion hazardous areas according to EN 60079-0:2012 + A11 and EN 60079-11:2012.Further it is suited for use in safety-related systems, including SIL2 as per IEC 61508.In order to ensure correct operation to the intended purpose it is required to observe the national regulations and directives.

For use in explosion hazardous areas conform to classification

II 2 G and II 1 D (Group II, Category 2 G, electrical equipment for gaseous atmospheres and category 1 D, electrical equipment for dust atmospheres).

Marking (see device or technical data sheet)

Ⓔx II 2 G and Ex ia IIC T6 Gb and Ⓔx II 1 D Ex ia IIIC T95 °C Da acc. to EN 60079-0, -11

Local admissible ambient temperature

as ATEX category II 2 G electrical equipment -25…+100 °C, as category II 1 D -25…+70 °C. The corresponding temperature classes are provided in the ATEX type-examination certificate.

Installation/Commissioning

These devices may only be installed, connected and operated by trained and qualified staff. Qualified staff must have knowledge of protection classes, directives and regulations concerning electrical equipment designed for use in explosion hazardous areas.Please verify that the classification and the marking on the device comply with the actual application conditions.

This device is only suited for connection to approved Exi circuits according to EN 60079-0 and EN 60079-11. Please observe the maximum admissible electrical values.After connection to other circuits the sensor may no longer be used in Exi installations. When interconnected to (associated) electrical equipment, it is required to perform the "Proof of intrinsic safety" (EN60079-14).Attention! When used in safety systems, all content of the security manual must be observed.

Installation and mounting instructions

Avoid static charging of cables and plastic devices. Please only clean the device with a damp cloth. Do not install the device in a dust flow and avoid build-up of dust deposits on the device.If the devices and the cable could be subject to mechanical damage, they must be protected accordingly. They must also be shielded against strong electro-magnetic fields.The pin configuration and the electrical specifications can be taken from the device marking or the technical data sheet.In order to avoid contamination of the device, please remove possible blanking plugs of the cable glands or connectors only shortly before inserting the cable or opening the cable socket.

Special conditions for safe operation

avoid static charging

Service/Maintenance

Repairs are not possible. The approval expires if the device is repaired or modified by a person other than the manufacturer. The most important data from the approval are listed.

NI20-CP40-Y1X/S100| 09/09/2020 14-35 | technical changes reserved