NI40-CP80-FZ3X2/S100
Inductive Sensor – With Increased Temperature Range

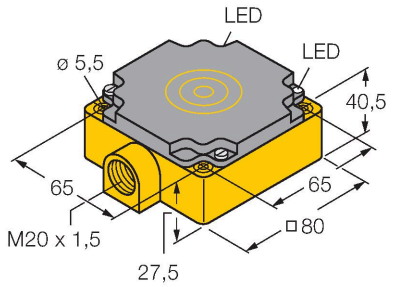

Technical data

Type	NI40-CP80-FZ3X2/S100
Ident. no.	13443
Rated switching distance	40 mm
Mounting conditions	Non-flush
Secured operating distance	≤ (0.81 × Sn) mm
Correction factors	St37 = 1; Al = 0.3; stainless steel = 0.7; Ms = 0.4
Repeat accuracy	≤ 2 % of full scale
Temperature drift	≤ ± 10 %
	≤ ± 20 %, ≥ +70 °C
Hysteresis	3…15 %
Ambient temperature	-25…+100 °C
Operating voltage	20…250 VAC
Operating voltage	10…300 VDC
DC rated operational current	≤ 300 mA
Rated operational current	See derating curve
Frequency	≥ 50…≤ 60 Hz
Residual current	≤ 1.7 mA
Isolation test voltage	≤ 1.5 kV
Surge current	≤ 8 A (≤ 10 ms max. 5 Hz)
Voltage drop at I_e	≤ 6 V
Output function	2-wire, Connection programmable
Smallest operating current	≥ 3 mA
Switching frequency	0.01 kHz

Features

- Rectangular, height 41 mm
- Plastic, PBT-GF30-V0
- Temperatures up to +100 °C
- AC 2-wire, 20…250 VDC
- DC 2-wire, 10…300 VDC
- NC/NO programmable
- Terminal chamber

Wiring diagram

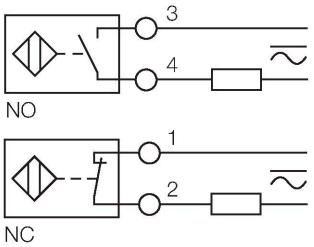

Functional principle

Inductive sensors detect metal objects contactless and wear-free. For this purpose they use a high-frequency electromagnetic AC field that interacts with the target. The sensors hosting a ferrite core coil generate the AC field through an LC resonant circuit.
Special versions are available for ambient temperatures between -60°C and +250°C.

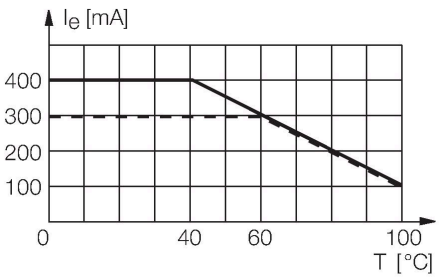

NI40-CP80-FZ3X2/S100| 09/09/2020 14-42 | technical changes reserved

Technical data

Design	Rectangular, CP80
Dimensions	80 x 80 x 41 mm
Housing material	Plastic, PBT-GF30-V0
Active area material	PBT-GF30-V0
Electrical connection	Terminal chamber
Clamping ability	≤ 2.5 mm²
Vibration resistance	55 Hz (1 mm)
Shock resistance	30 g (11 ms)
Protection class	IP67
MTTF	2283 years acc. to SN 29500 (Ed. 99) 40 °C
Power-on indication	LED, Green
Switching state	LED, Red

Mounting instructions

Mounting instructions/Description

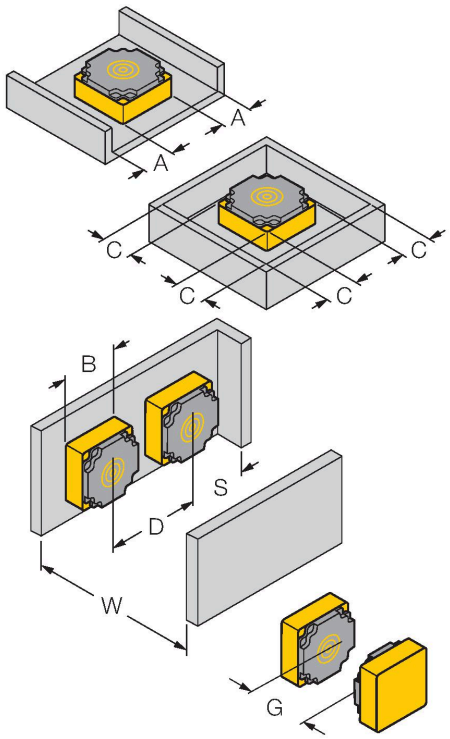

Distance D	3 x B
Distance W	3 x Sn
Distance S	1.5 x B
Distance G	6 x Sn
Distance A	1 x B
Distance C	1 x B
Width active area B	80 mm

NI40-CP80-FZ3X2/S100| 09/09/2020 14-42 | technical changes reserved