BI20R-W30S-AP6X-H1141
Inductive Sensor – Ring Sensor

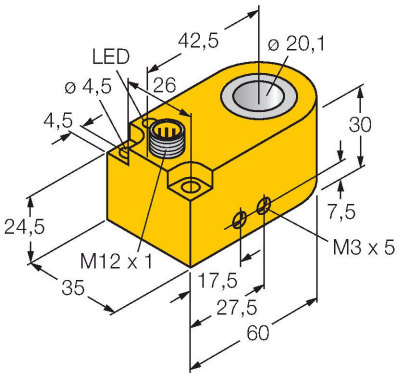

Technical data

Type	BI20R-W30S-AP6X-H1141
ID	1403231
General data	
Inside ring diameter D	20.1 mm
Steel ball diameter (DIN 5401)	≥ 4 mm
Fly-by speed	40 m/s
pulse stop	≥ 5 ms
Pulse duration at the ouput	≥ 100 ms ± 20 %
Electrical data	
Operating voltage U_B	10…30 VDC
Ripple U_{ss}	≤ 10 % U_{Bmax}
DC rated operating current I_e	≤ 200 mA
No-load current	≤ 15 mA
Residual current	≤ 0.1 mA
Isolation test voltage	0.5 kV
Short-circuit protection	yes/Cyclic
Voltage drop at I_e	≤ 1.8 V
Wire break/reverse polarity protection	yes/Complete
Output function	3-wire, NO contact, PNP
Switching frequency	0.008 kHz
Mechanical data	
Design	Ring sensor, W30S
Dimensions	60 x 35 x 30 mm
Housing material	Plastic, PA12-GF30

Features

- Rectangular, height 30 mm
- Plastic, PA12-GF30
- Static output behaviour
- Output pulse length min. 100 ms
- DC 3-wire, 10…30 VDC
- NO contact, PNP output
- M12 x 1 male connector

Wiring diagram

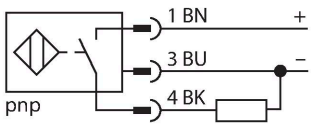

Functional principle

Inductive sensors detect metal objects contactless and wear-free. For this purpose they use a high-frequency electromagnetic AC field that interacts with the target. Inductive ring sensors generate this field through an LC resonant circuit. The target acts as the coil core.

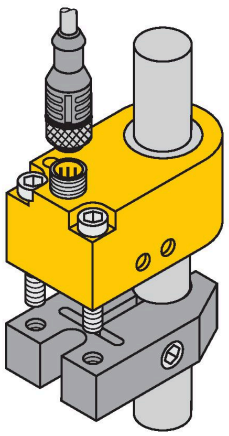

BI20R-W30S-AP6X-H1141| 02/21/2025 14-41 | technical changes reserved

Technical data

Electrical connection	Connector, M12 × 1
Coil body	plastic, POM
Environmental conditions	
Ambient temperature	-25…+70 °C
Vibration resistance	55 Hz (1 mm)
Shock resistance	30 g (11 ms)
Protection class	IP67
MTTF	2283 years acc. to SN 29500 (Ed. 99) 40 °C
Switching state	LED, Yellow

Mounting instructions

Mounting instructions/Description

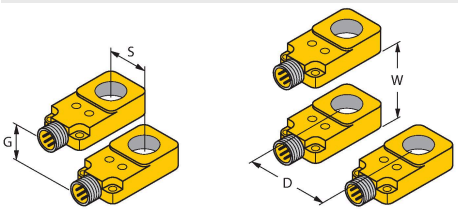

Distance D	40 mm
Distance W	55 mm
Distance S	20 mm
Distance G	40 mm

Accessories

BS-BI20R-W30	6900401

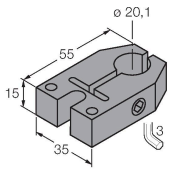

Mounting bracket for ring sensors for direct mounting on the pipe or tube; clamping range 19…20 mm; material: POM

Wiring accessories

Dimension drawing	Type	ID	
	RKC4T-2/TEL	6625010	Connection cable, M12 female connector, straight, 3-pin, cable length: 2 m, jacket material: PVC, black; cULus approval



BI20R-W30S-AP6X-H1141| 02/21/2025 14-41 | technical changes reserved