NI100U-K90SR-VN4X2
Inductive Sensor

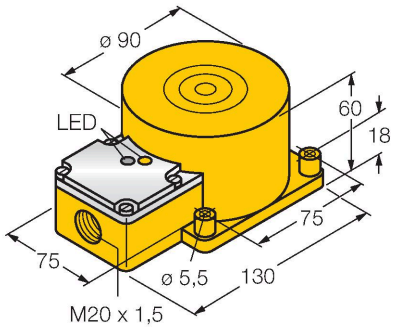

Features

- Rectangular, height 60 mm
- Plastic, PBT-GF30-V0
- Factor 1 for all metals
- Increased switching distance
- Protection class IP68
- Resistant to magnetic fields
- Extended temperature range
- Auto-compensation protects against pre-damping
- One-sided fitting possible
- DC 4-wire, 10…65 VDC
- Changeover contact, NPN output
- Terminal chamber

Technical data

Type	NI100U-K90SR-VN4X2
Ident. no.	1515503
Rated switching distance	100 mm
Mounting conditions	Non-flush, partially embeddable
Secured operating distance	≤ (0.81 × Sn) mm
Repeat accuracy	≤ 2 % of full scale
Temperature drift	≤ ± 10 %
	≤ ± 15 %, ≤ -25 °C v ≥ +70 °C
Hysteresis	3…15 %
Ambient temperature	-30…+85 °C
Operating voltage	10…65 VDC
Residual ripple	≤ 10 % U_{ss}
DC rated operational current	≤ 200 mA
No-load current	≤ 15 mA
Residual current	≤ 0.1 mA
Isolation test voltage	≤ 0.5 kV
Short-circuit protection	yes / Cyclic
Voltage drop at I_e	≤ 1.8 V
Wire breakage/Reverse polarity protection	yes / Complete
Output function	4-wire, Complementary contact, NPN
Insulation class	⧈
Switching frequency	0.25 kHz
Design	Rectangular, K90SR
Dimensions	130 x 75 x 60 mm

Wiring diagram

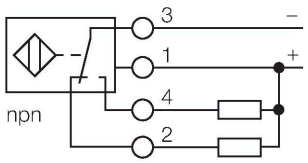

Functional principle

Inductive sensors are designed for wear-free and contactless detection of metal objects. uprox+ sensors have significant advantages due to their patented multi-coil system. They excel thanks to their optimum switching distances, maximum flexibility and operational reliability as well as efficient standardization.

NI100U-K90SR-VN4X2| 09/09/2020 14-47 | technical changes reserved

Technical data

Housing material	Plastic, PBT-GF30-V0
Active area material	PBT-GF30-V0
Electrical connection	Terminal chamber
Clamping ability	≤ 2.5 mm²
Vibration resistance	55 Hz (1 mm)
Shock resistance	30 g (11 ms)
Protection class	IP68
MTTF	874 years acc. to SN 29500 (Ed. 99) 40 °C
Power-on indication	LED, Green
Switching state	LED, Yellow
Included in delivery	cable gland

NI100U-K90SR-VN4X2| 09/09/2020 14-47 | technical changes reserved

Mounting instructions

Mounting instructions/Description

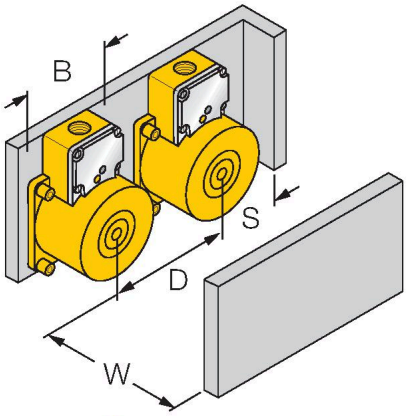

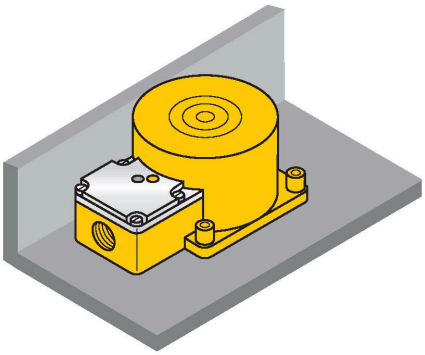

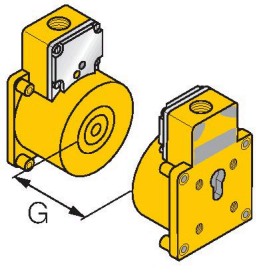

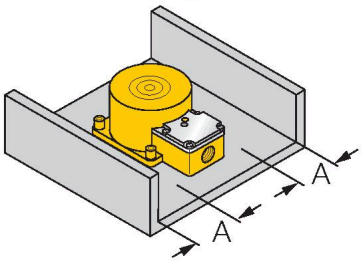

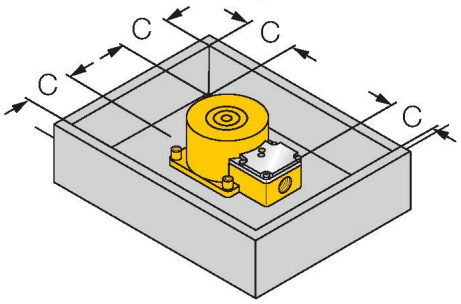

Distance D	3 x B
Distance W	3 x Sn
Distance S	1 x B
Distance G	6 x Sn
Distance A	1 x Sn
Distance C	2 x Sn
Width active area B	90 mm

1-side flush mounting

1-side mounting:

Sr = 70 mm

NI100U-K90SR-VN4X2| 09/09/2020 14-47 | technical changes reserved