WIM200-Q25L-LI-EXI-H1141
Magnetically Actuated Linear Position Sensor

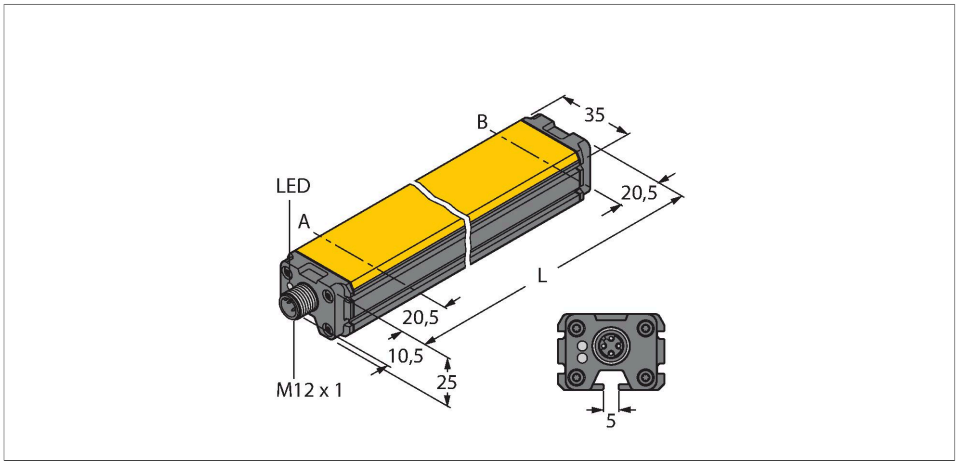

Features

- Rectangular, aluminium / plastic
- Many mounting possibilities
- Immune to external magnetic fields
- Extremely short blind zones
- 2-wire, 14…30 VDC
- Analog output
- 4 … 20 mA
- Male connector, M12 x 1
- ATEX category II 2 G, Ex Zone 1
- ATEX category II 2 D, Ex Zone 21

Technical data

Type	WIM200-Q25L-LI-EXI-H1141
Ident. no.	1536645
Measuring principle	Magnetic
Measuring range	200 mm
Resolution	0.2 mm/10 bit
Repeatability	≤ 0.1% of measuring range IA - BI
	depending on positioning element
Linearity deviation	≤ 1 %
Temperature drift	≤ ± 0.03 % / K
Ambient temperature	-25…+65 °C
	For explosion hazardous areas see instruction leaflet
Operating voltage	14…30 VDC
	an der Anschlussstelle des Sensors
Residual ripple	≤ 10 % U_{ss}
Isolation test voltage	≤ 0.5 kV
Short-circuit protection	yes
Wire breakage/Reverse polarity protection	yes / Complete
Output function	4-pin, Analog output
Current output	4…20 mA
Load resistance current output	≤ [(U_B -14 V) / 20 mA] kΩ
Sample rate	200 Hz
Approval acc. to	KEMA 03 ATEX 1122 X Issue no. 2
Internal capacitance (C_i)/inductance (L_i)	0 nF/0 µH

Wiring diagram

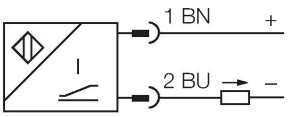

Functional principle

Linear position sensors operate on the Hall principle and accomplish simple control tasks. They provide an output signal proportional to the actuating magnet. The polarity of the magnet has no effect on the output signal. The outstanding features of these robust sensors are excellent repeatability, resolution and linearity, excellent electromagnetic capability and a broad temperature range.

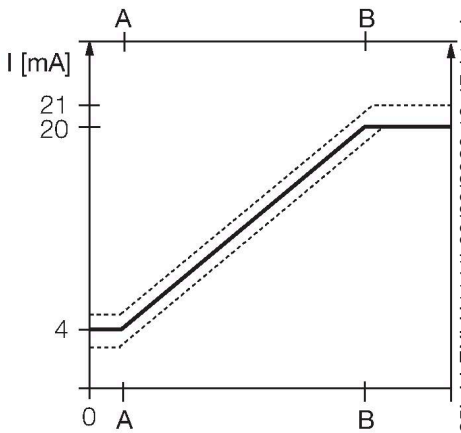

WIM200-Q25L-LI-EXI-H1141| 09/09/2020 16-47 | technical changes reserved

Technical data

Device marking	Ⓔx II 2 G Ex ia IIC T6 Gb / II 2 D Ex ia IIIC T85 °C Db
	(max. Ui = 30V, Ii = 120mA, Pi = 675mW)
Design	Profile, Q25L
Dimensions	241 x 35 x 25 mm
Housing material	Aluminum/plastic, PA6-GF30
Active area material	Plastic, PA6-GF30
Electrical connection	Connector, M12 × 1
Vibration resistance	55 Hz (1 mm)
Shock resistance	30 g (11 ms)
Protection class	IP67
MTTF	131 years

Mounting instructions

Mounting instructions/Description

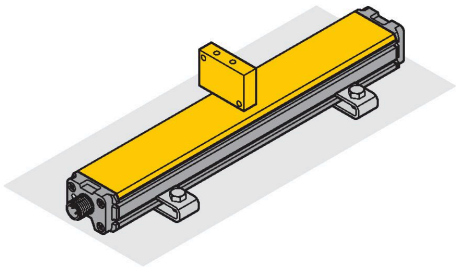

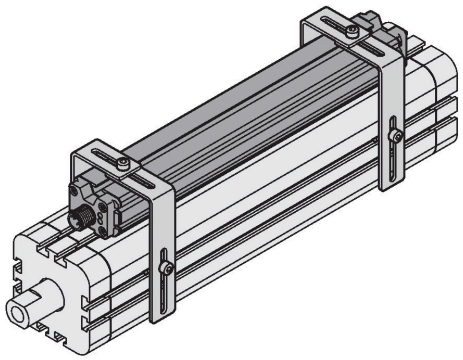

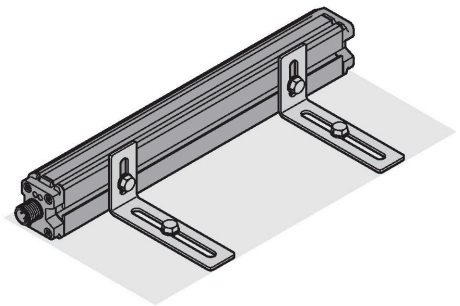

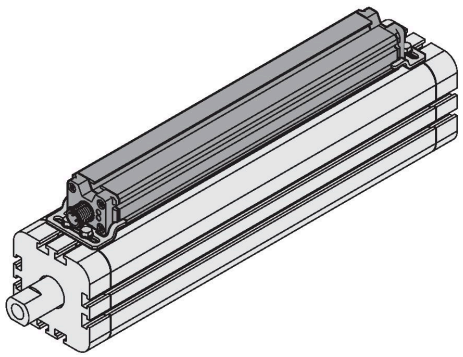

Numerous accessories allow the sensor to be mounted in various positions. Opposite to the active face, the sensor housing features a mounting groove for which sliding blocks are available. The lateral slot profiles can be used for mounting, too.
When used with an external positioning element, the sensor can either be mounted with the active face located opposite or laterally to the mounting surface. Drilling slots guarantee highest flexibility for fine adjustment.
The mounting accessories for linear position sensors can be adjusted to the respective cylinder sizes. The stainless steel accessories guarantee safe and robust mounting as well as highest flexibility. .

WIM200-Q25L-LI-EXI-H1141| 09/09/2020 16-47 | technical changes reserved

Accessories

M1-Q25L	6901045
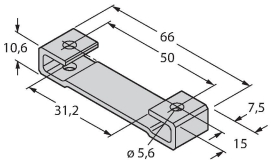	Mounting foot for linear position sensors LI-Q25L; material: aluminum; 2 pcs. per bag

M2-Q25L	6901046
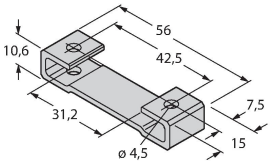	Mounting foot for linear position sensors LI-Q25L; material: aluminum; 2 pcs. per bag

MB1-Q25	6901026
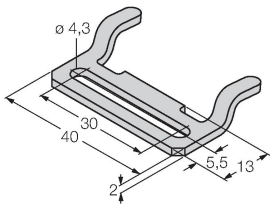	Mounting clip for linear position sensor Q25L; material Stainless steel; 2 pcs. per bag

MB2.1-Q25	6901027
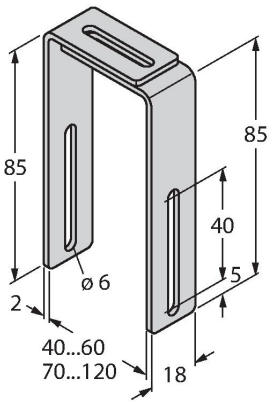	Mounting bracket for linear position sensors Q25L for mounting on pneumatic cylinders (40…60 mm); material: Stainless steel; 4 pcs. per bag

MB2.2-Q25(4PCS)	6901028
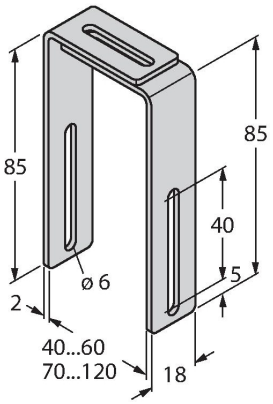	Mounting bracket for linear position sensors Q25L, for mounting on pneumatic cylinders (70…120 mm); material: Stainless steel; 4 pcs. per bag

M4-Q25L	6901048
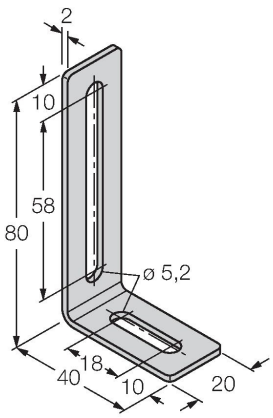	Mounting bracket and sliding block for linear position sensors LI-Q25L; material: Stainless steel; 2 pcs. per bag

MN-M4-Q25	6901025
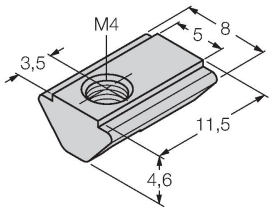	Sliding block with M4 thread for the backside profile of the LI-Q25L; material: galvanized steel; 10 pcs. per bag

MN-M5-Q25	6901039
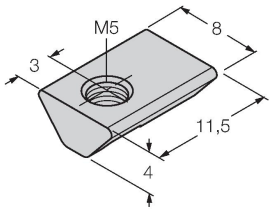	Sliding block with M5 thread for the backside profile of the LI-Q25L; material Stainless steel; 10 pcs. per bag

WIM200-Q25L-LI-EXI-H1141| 09/09/2020 16-47 | technical changes reserved

DM-Q12	6900367

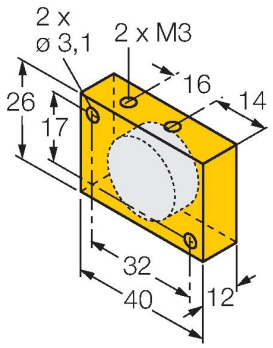

Actuator, rectangular, plastic, attainable switching distance 58 mm on BIM-(E)M12 magnetic field sensors or 49 mm on BIM-EG08 magnetic field sensors; for Q25L linear position sensors: recommended distance between the sensor and magnet: 3…5 mm

DMR15-6-3	6900216

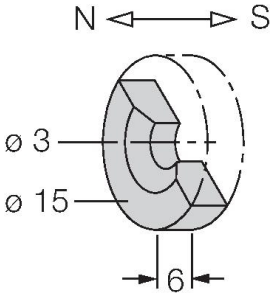

Actuation magnet, Ø 15 mm (Ø 3 mm), h: 6 mm; attainable switching distance 36 mm on BIM-(E)M12 magnetic field sensors or 32 mm on BIM-EG08 magnetic field sensors; for Q25L linear position sensors: recommended distance between the sensor and magnet: 3…4 mm

DMR20-10-4	6900214

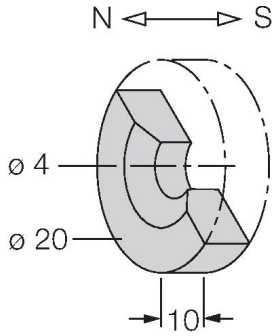

Actuation magnet; Ø 20 mm (Ø 4 mm), h: 10 mm; attainable switching distance 59 mm on BIM-(E)M12 magnetic field sensors or 50 mm on BIM-EG08 magnetic field sensors; for Q25L linear position sensors: recommended distance between the sensor and magnet: 3…4 mm

DMR31-15-5	6900215

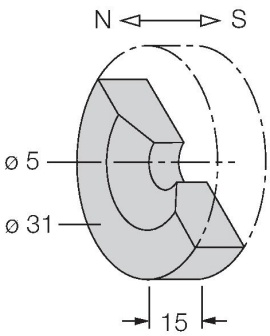

Actuation magnet, Ø 31 mm (Ø 5 mm), h: 15 mm; attainable switching distance 90 mm on BIM-(E)M12 magnetic field sensors or 78 mm on BIM-EG08 magnetic field sensors; for Q25L linear position sensors: recommended distance between the sensor and magnet: 3…5 mm

P1-WIM-Q25L	6901088

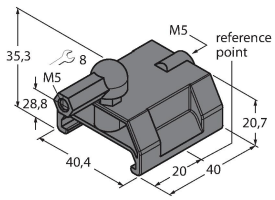

Guided positioning element for WIM-Q25L, inserted in the sensor groove.

WIM200-Q25L-LI-EXI-H1141| 09/09/2020 16-47 | technical changes reserved

Operating Instructions

Intended use

This device fulfills the directive 2014/34/EC and is suited for use in explosion hazardous areas according to EN60079-0:2012 + A11 -11:2012.In order to ensure correct operation to the intended purpose it is required to observe the national regulations and directives.

For use in explosion hazardous areas conform to classification

II 2 G and II 2 D (Group II, Category 2 G, electrical equipment for gaseous atmospheres and category 2 D, electrical equipment for dust atmospheres)

Marking (see device or technical data sheet)

Ex II 2 G Ex ia IIC T6 Gb and Ex II 2 D Ex ia IIIC T85 °C Db acc. to EN 60079-0, -11
Ex II 2 D and Ex ia IIIC T100°C Db acc. to EN61241

Local admissible ambient temperature

-25…+66 °C

Installation/Commissioning

These devices may only be installed, connected and operated by trained and qualified staff. Qualified staff must have knowledge of protection classes, directives and regulations concerning electrical equipment designed for use in explosion hazardous areas.Please verify that the classification and the marking on the device comply with the actual application conditions.

This device is only suited for connection to approved Exi circuits according to EN 60079-0 and EN 60079-11. Please observe the maximum admissible electrical values.After connection to other circuits the sensor may no longer be used in Exi installations. When interconnected to (associated) electrical equipment, it is required to perform the "Proof of intrinsic safety" (EN60079-14).

Installation and mounting instructions

Avoid static charging of cables and plastic devices. Please only clean the device with a damp cloth. Do not install the device in a dust flow and avoid build-up of dust deposits on the device.If the devices and the cable could be subject to mechanical damage, they must be protected accordingly. They must also be shielded against strong electro-magnetic fields.The pin configuration and the electrical specifications can be taken from the device marking or the technical data sheet.In order to avoid contamination of the device, please remove possible blanking plugs of the cable glands or connectors only shortly before inserting the cable or opening the cable socket.

Special conditions for safe operation

The device must be protected against any kind of mechanical damage, avoid static charging.

Service/Maintenance

Repairs are not possible. The approval expires if the device is repaired or modified by a person other than the manufacturer. The most important data from the approval are listed.

WIM200-Q25L-LI-EXI-H1141| 09/09/2020 16-47 | technical changes reserved